ASSEMBLY INSTRUCTIONS

EEI-6896

V0.03.03.24

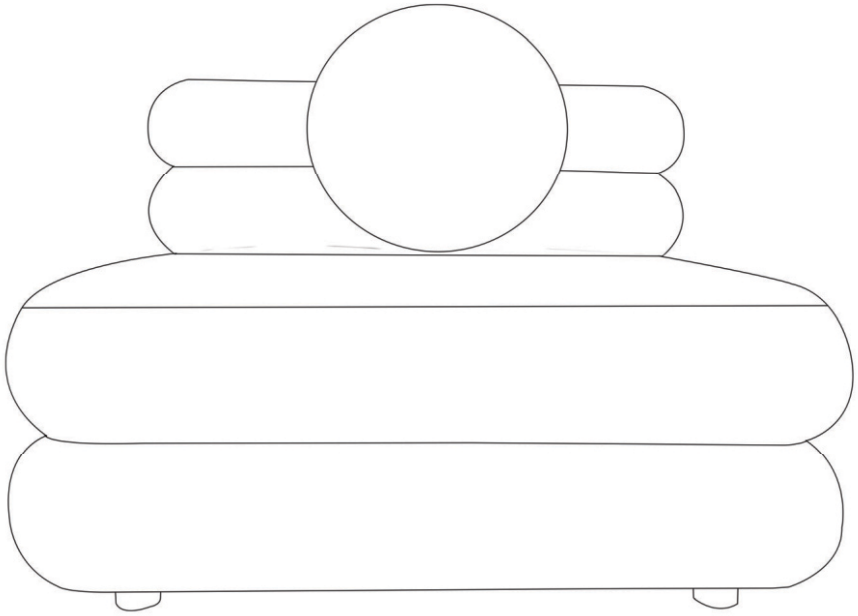

Questions? Contact us!

609.256.9000 • cs@modway.com
www.modway.com

*modway

Let's get started!

*modway

Read through all of the instructions before starting

Care instructions are listed in the last step of this manual

Approx. 30 minutes assembly time

Make sure you have all parts and components before discarding any packing materials

1 people recommended for assembly

Only use hand tools to assemble this item. Do not use power tools. Do not tighten bolts or screws completely until all hardware is lined up and inserted into the holes.

Do not over-tighten screws and bolts to avoid stripping the hardware or cracking the item.

Assemble your item on a flat, carpeted area, with plenty of space to work. This will prevent damage and scratches to your floors or the item while you're assembling the product.

Keep all components and packaging out of reach of children or animals to avoid risk of choking or suffocation.

Furniture components:

1	Pillow Cushion	x1
2	Chair Base	x1
3	Chair Leg	x4

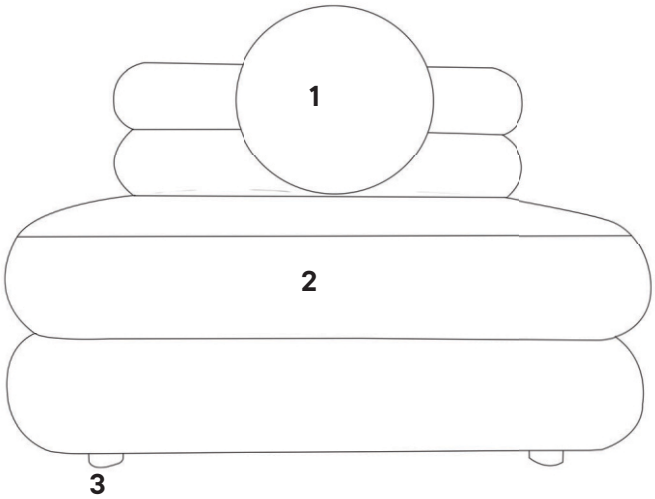

Provided hardware:

A	Felt Pad	x4

Wait!

Missing parts or hardware? Need assistance?
Contact us before returning your item. We're here to help!
609.256.9000 • cs@modway.com

Step 1

COMPONENTS

1	Pillow Cushion	x1
2	Chair Base	x1
3	Chair Leg	x4

HARDWARE

A	Felt Pad	x4

Unzip the bottom cover and locate the Pillow Cushion(1) + Chair Leg(3) + Hardware package.

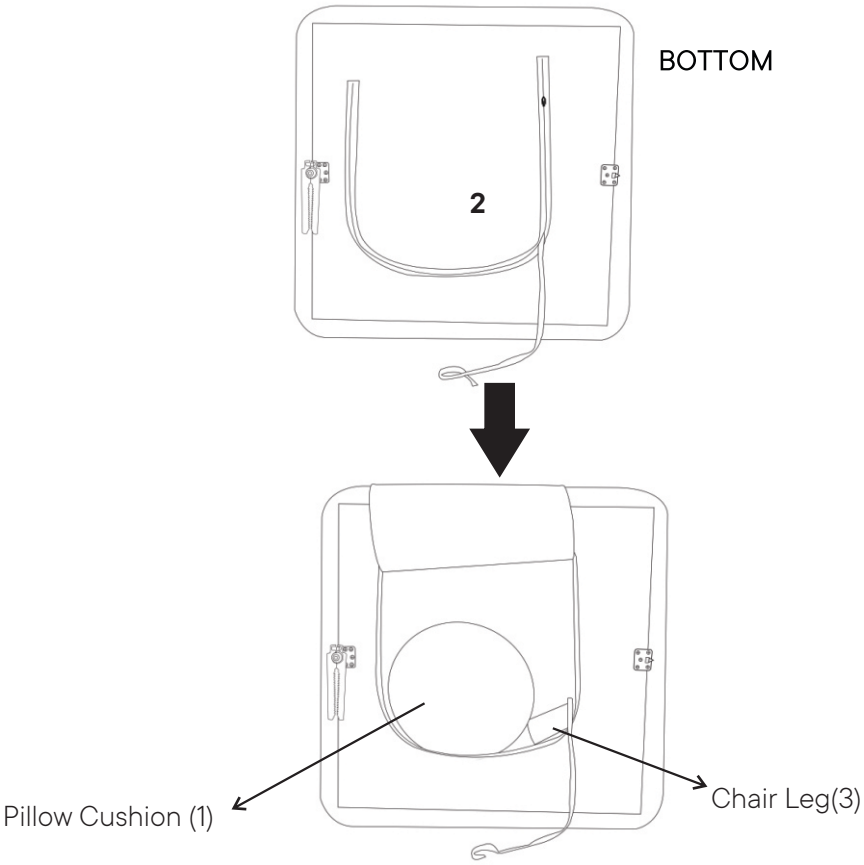

Step 2

COMPONENTS

2	Chair Base	x1
3	Chair Leg	x4

HARDWARE

A	Felt Pad	x4

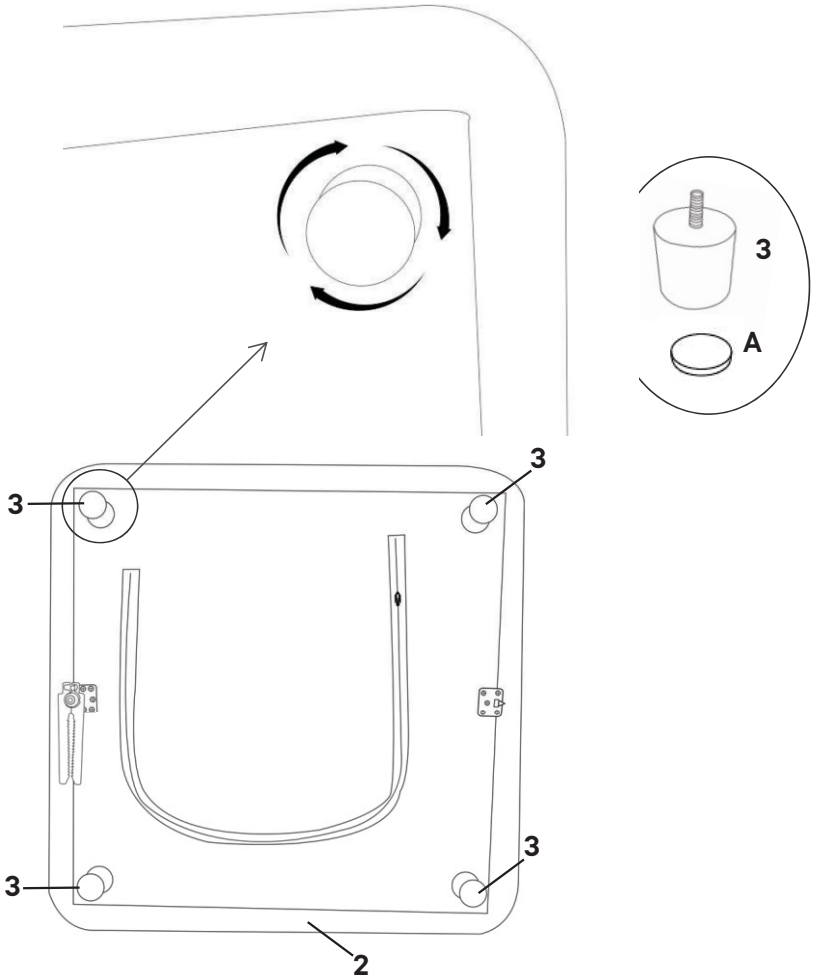

Step 3

COMPONENTS

1	Pillow Cushion	x1
2	Chair Base	x1

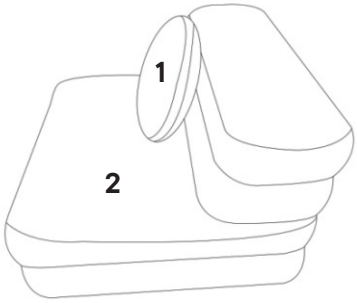

Great job!

Your Chair is complete and ready to enjoy.

CARING FOR YOUR ITEM

Indoor use only.

Not contract grade.

Clean using a non-abrasive cloth and a mild cleaner.

Never use harsh chemicals, as they could damage the finish or integrity of the item.

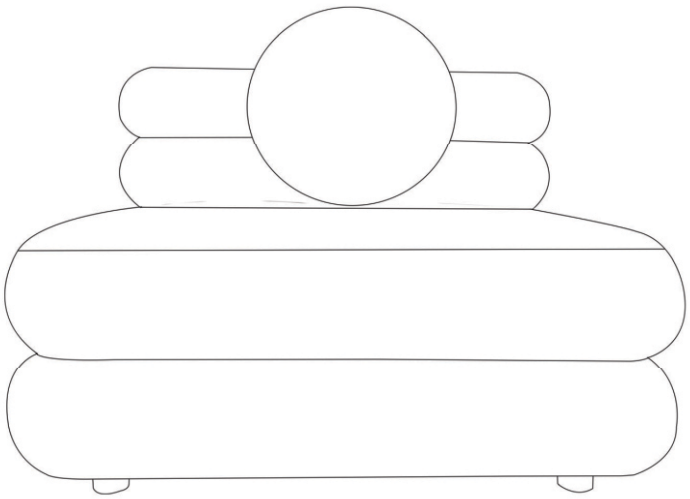

CONNECT WITH US!

Tag us **@modway_furniture** and **#modway** for a chance to be featured.

Free combination with EEI-6897/EEI-6898/EEI-6899.
Align the pre-installed Clip to the pre-installed Post as shown.
Push it and EEI-6897/EEI-6898/EEI-6899 slowly until the Clip and the Post click together

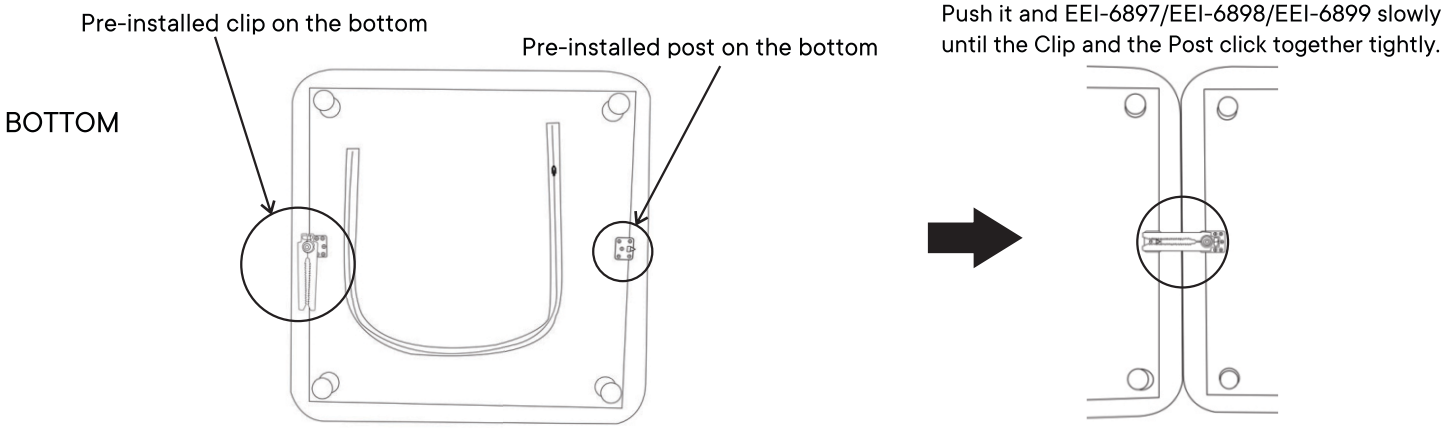

If you want to unlock the sofa combination: Lift up the side of the Chair with pre-installed post on the bottom and move other parts apart from the Chair.

ASSEMBLY INSTRUCTIONS

EEI-6898

V0.03.03.24

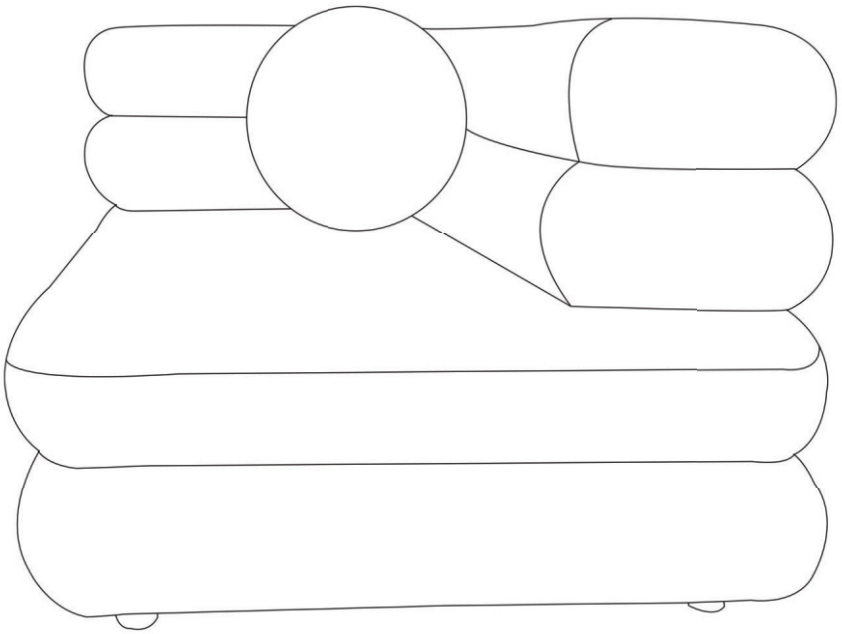

Questions? Contact us!

609.256.9000 • cs@modway.com
www.modway.com

*modway

Let's get started!

*modway

Read through all of the instructions before starting

Care instructions are listed in the last step of this manual

Approx. 30 minutes assembly time

Make sure you have all parts and components before discarding any packing materials

1 people recommended for assembly

Only use hand tools to assemble this item. Do not use power tools. Do not tighten bolts or screws completely until all hardware is lined up and inserted into the holes.

Do not over-tighten screws and bolts to avoid stripping the hardware or cracking the item.

Assemble your item on a flat, carpeted area, with plenty of space to work. This will prevent damage and scratches to your floors or the item while you're assembling the product.

Keep all components and packaging out of reach of children or animals to avoid risk of choking or suffocation.

Furniture components:

1	Pillow Cushion	x1
2	Corner Base	x1
3	Corner Leg	x4

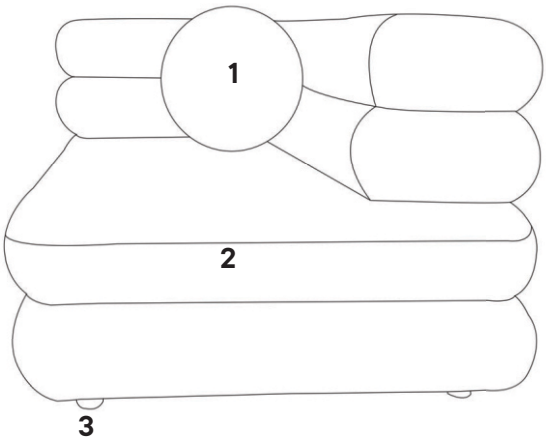

Provided hardware:

A		Felt Pad	x4

Wait!

Missing parts or hardware? Need assistance?
Contact us before returning your item. We're here to help!
609.256.9000 • cs@modway.com

Step 1

COMPONENTS

2	Corner Base	x1
3	Corner Leg	x4

HARDWARE

A	Felt Pad	x4

Unzip the bottom cover and locate the Corner Leg(3) + Hardware package.

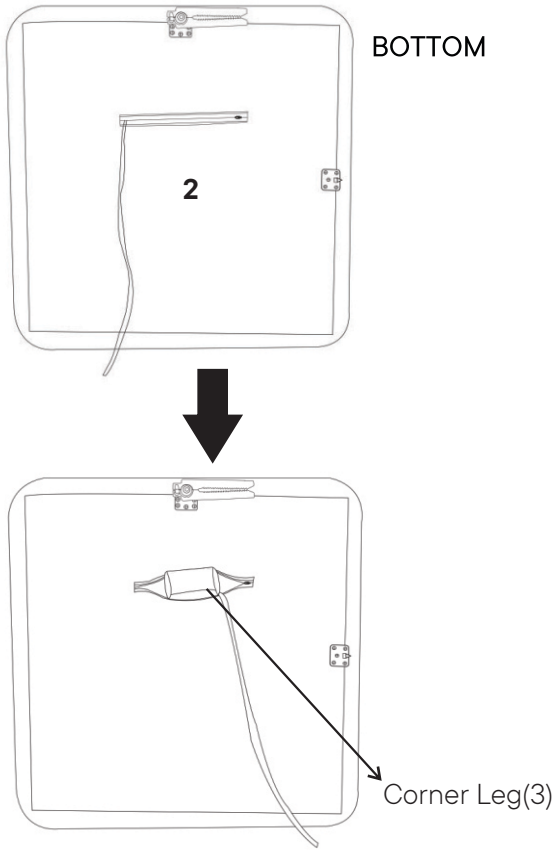

Step 2

COMPONENTS

2	Corner Base	x1
3	Corner Leg	x4

HARDWARE

A	Felt Pad	x4

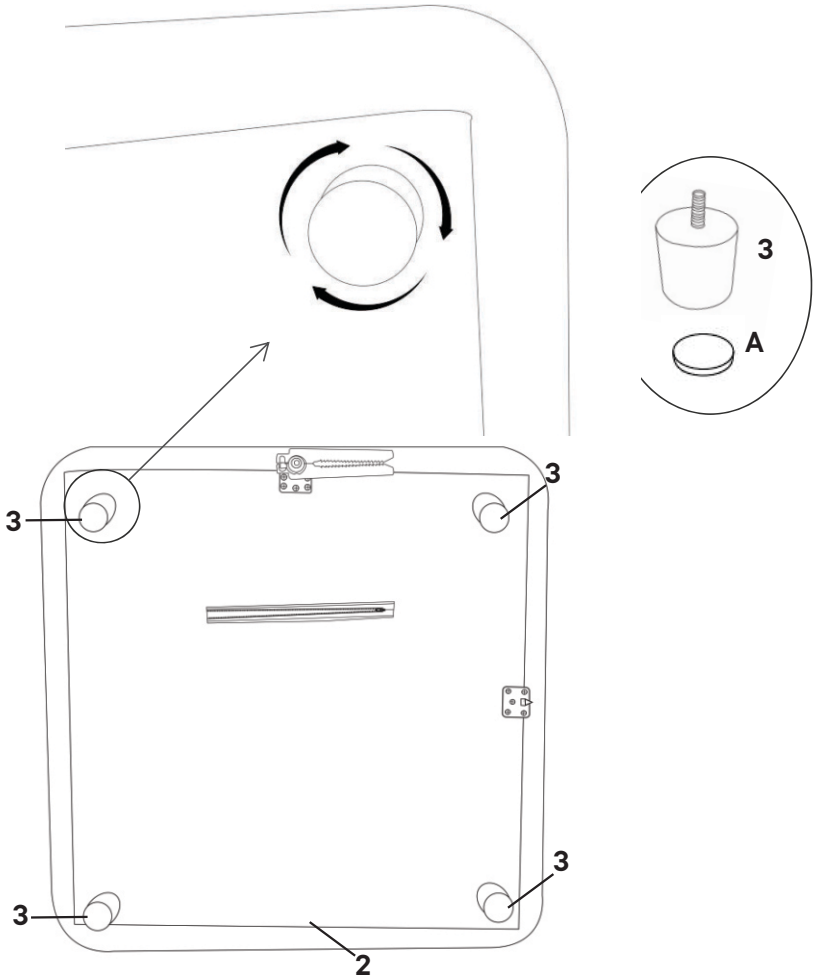

Step 3

COMPONENTS

1	Pillow Cushion	x1
2	Corner Base	x1

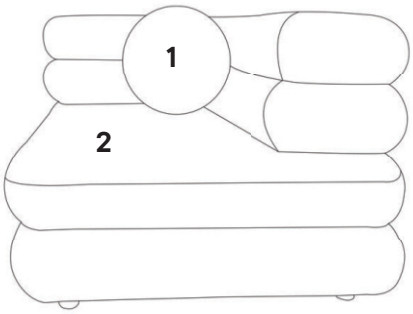

Great job!

Your Corner is complete and ready to enjoy.

CARING FOR YOUR ITEM

Indoor use only.

Not contract grade.

Clean using a non-abrasive cloth and a mild cleaner.

Never use harsh chemicals, as they could damage the finish or integrity of the item.

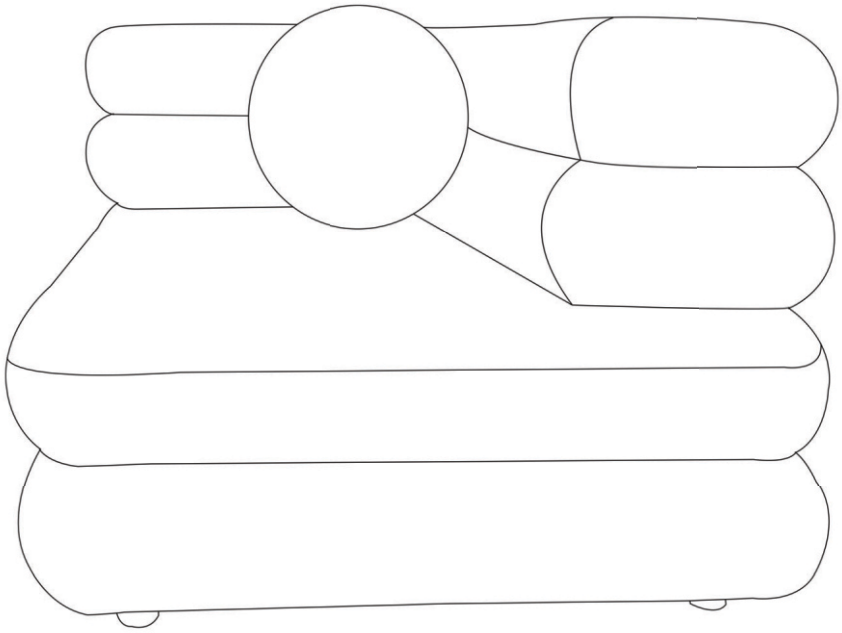

CONNECT WITH US!

Tag us **@modway_furniture** and **#modway** for a chance to be featured.

Free combination with EEI-6896/EEI-6897/EEI-6899.
Align the pre-installed Clip to the pre-installed Post as shown.
Push it and EEI-6896/EEI-6897/EEI-6899 slowly until the Clip and the Post click

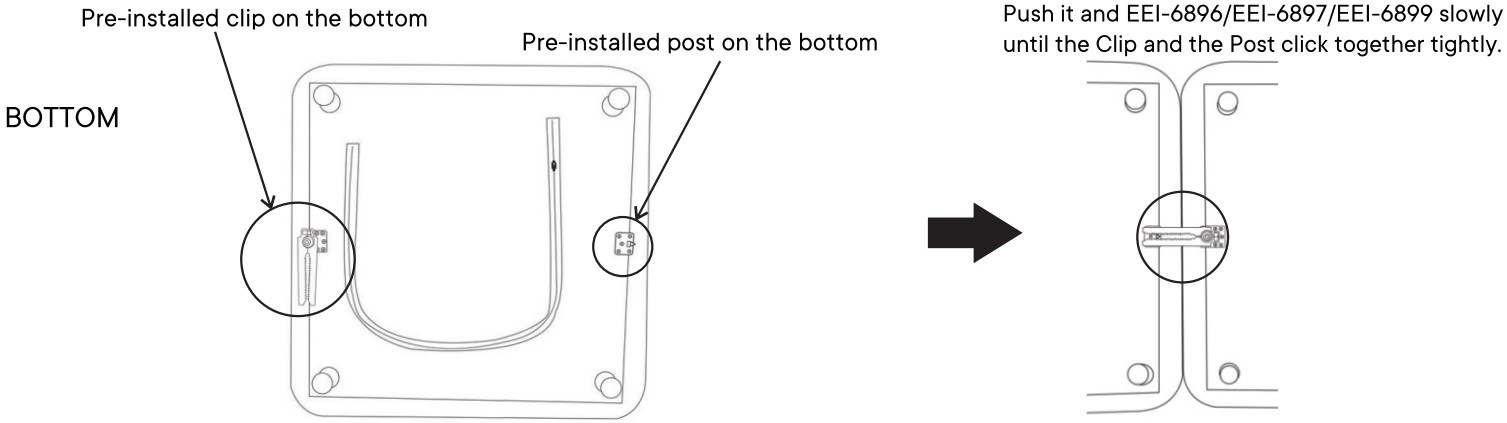

If you want to unlock the sofa combination: Lift up the side of the Chair with pre-installed post on the bottom and move other parts apart from the Chair.