ASSEMBLY INSTRUCTIONS
AIDEN BED - FULL

meridian. furniture

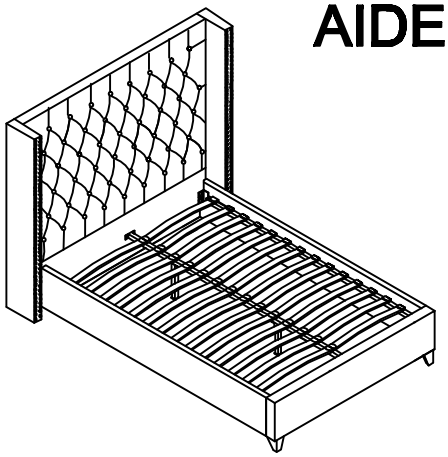

+ Do Not Use Power Tools



+ Suggested Adults

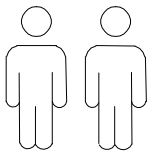

NOTE: For questions about parts or assembly please email support@meridianfurnitureusa.com or call us at 718-758-4455.

1 Read instructions cover to cover.

2 Save all packaging until assembly is completed.

+ Parts Included

①Head Board (1pc)

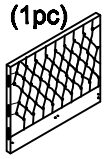

②Foot Board (1pc)

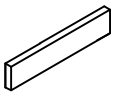

③Side Rails (2pcs)

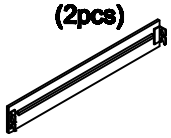

④DoublePlastic cap(14pcs)



⑤Center Support Bar(1pc)

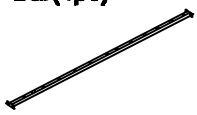

⑥Support Legs(2pcs)

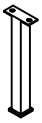

⑦Slats (28pcs)

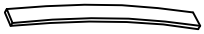

*Slats come packed in the bottom of headboard carton.

⑧SinglePlastic cap (28pcs)



⑨ Legs (4pcs)



⑩ Left wing (1pc)



⑪ Right wing (1pc)



1 IMPORTANT SAFETY INFORMATION

Do not assemble the product if any of the following parts arrived damaged:

Part #③ -Side Rails
Part #⑤ -Center Support Bar
Part #⑥ -Support Legs
Part #⑦ -Slats

2 IMPORTANT ASSEMBLY INFORMATION

Assembly Step ③ Ensure the side rail bracket is fully hooked onto bolt A loosely threaded with both washers on the OUTSIDE of thebracket first, then proceed to fully tightening all 4 corners.

Assembly Step ⑥ When installing slats,ensure that the curve is facing upwards.(✓)(✗)
*Slats come packed in the bottom of headboard carton.

+ Hardware Included

A Bolt M8*30mm (16pcs)



B Bolt M8*75mm (6pcs)



C Bolt M6*25mm (8pcs)



D Spring Washer (8pcs)



E Flat Washer ϕ20 (24pcs)



F M8 Allen Key (1pc)



G Flat Washer ϕ22 (6pcs)



H M4 Allen Key (1pc)



I Nut M8*13mm (4pcs)



J Spanner (1pc)



ASSEMBLY INSTRUCTIONS
AIDEN BED - FULL

meridian. furniture

① 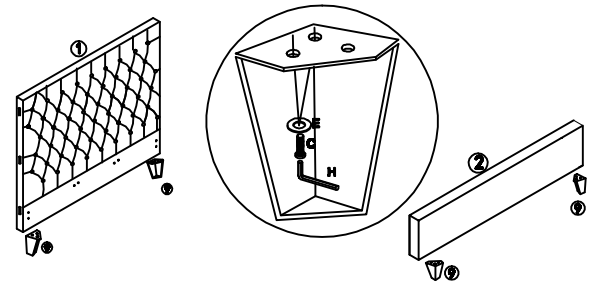

② 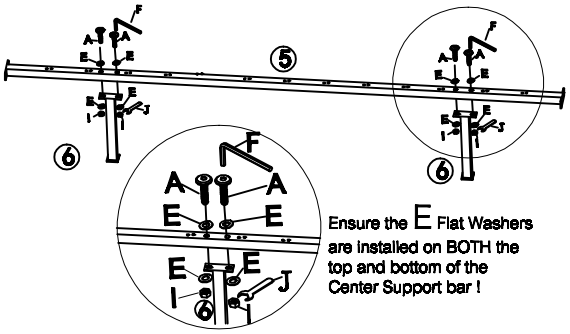

③ **Repeat this step for each corner of the bed.**

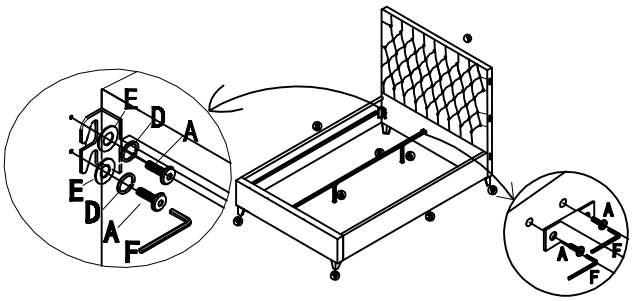

④ 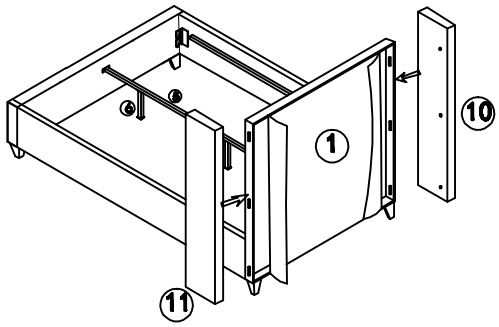

⑤ 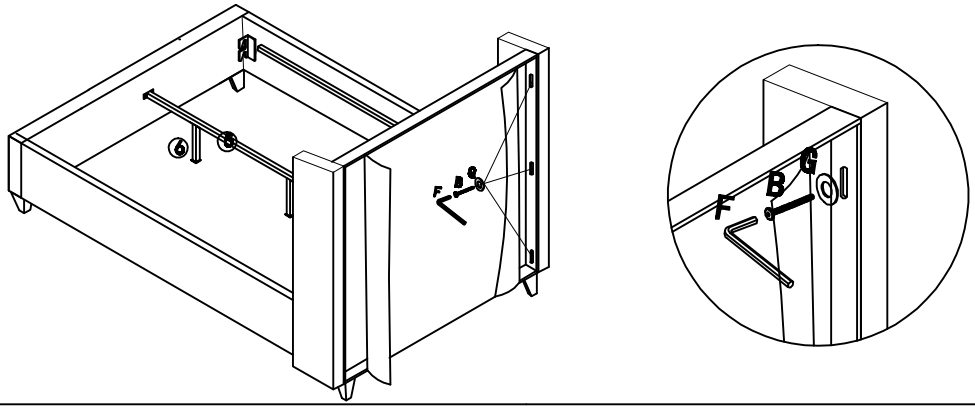

⑥ **When installing slats,ensure that the curve is facing upwards.(⌒) (⌒)**

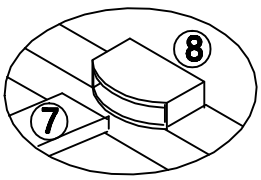

Note: Slats come packed in the bottom of headboard carton.

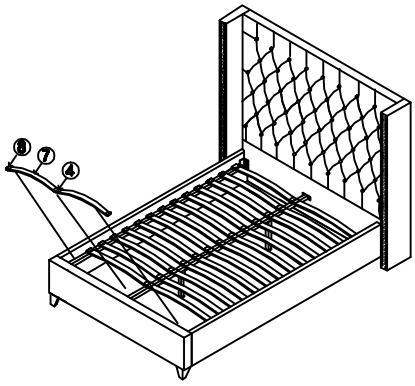

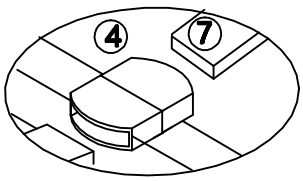

NOTE: For questions about parts or assembly please email support@meridianfurnitureusa.com or call us at 718-758-4455.