ASSEMBLY INSTRUCTIONS

88039 / 88040 Bench

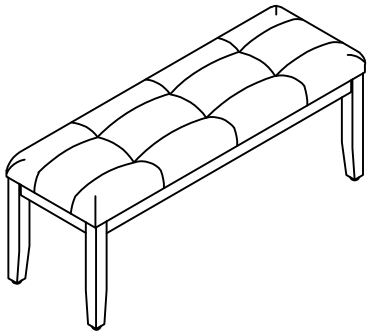

+Do Not Use Power Tools

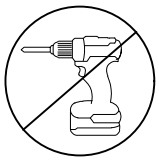

+Suggested Adults

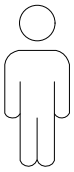

NOTE: For questions about parts or assembly please email support@meridianfurnitureusa.com

or call us at 718-758-4455.

1 Read instructions cover to cover.
2 Save all packaging until assembly is completed

+Parts Included

(1) Seat cushion
(1pc)

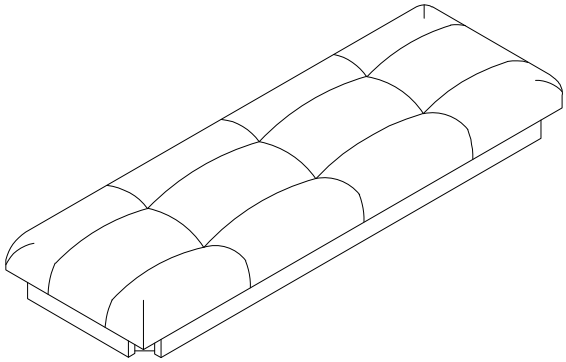

(2) Leg
(4pcs)



1 IMPORTANT SAFETY INFORMATION

Do not assemble the product if any of the following parts arrived damaged:

Part #(1)- Seat
Part #(2)- leg

2 IMPORTANT ASSEMBLY INFORMATION

Assembly Step (1) Use Bolt **A**, to connect Part (2) to Part (1).

*** Warning**: Do not over tighten screws

+Hardware Included

(A) Allen Bolt
(8pcs)

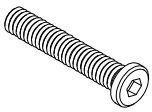

1/4"*50mm

(B) Spring washer
(8pcs)



1/4"

(C) Flat washer
(8pcs)

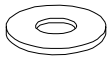

1/4"

(D) Allen key
(1pcs)



M4

ASSEMBLY INSTRUCTIONS

88039 / 88040 Bench - 48.25" x 16" x 19"

meridian furniture

①

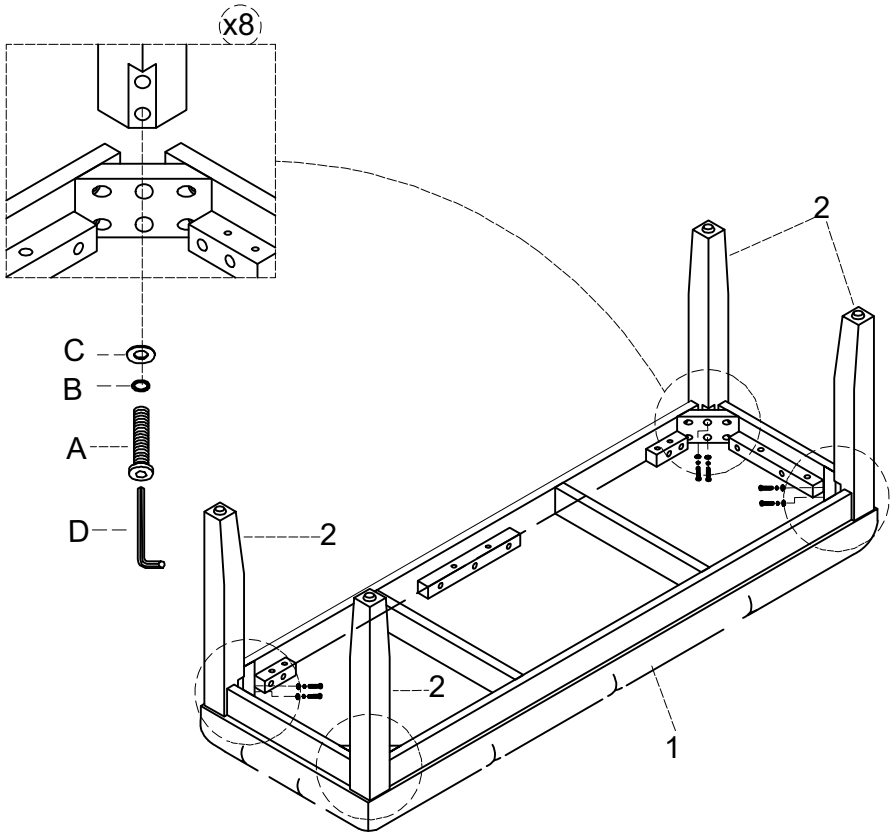

② Completed

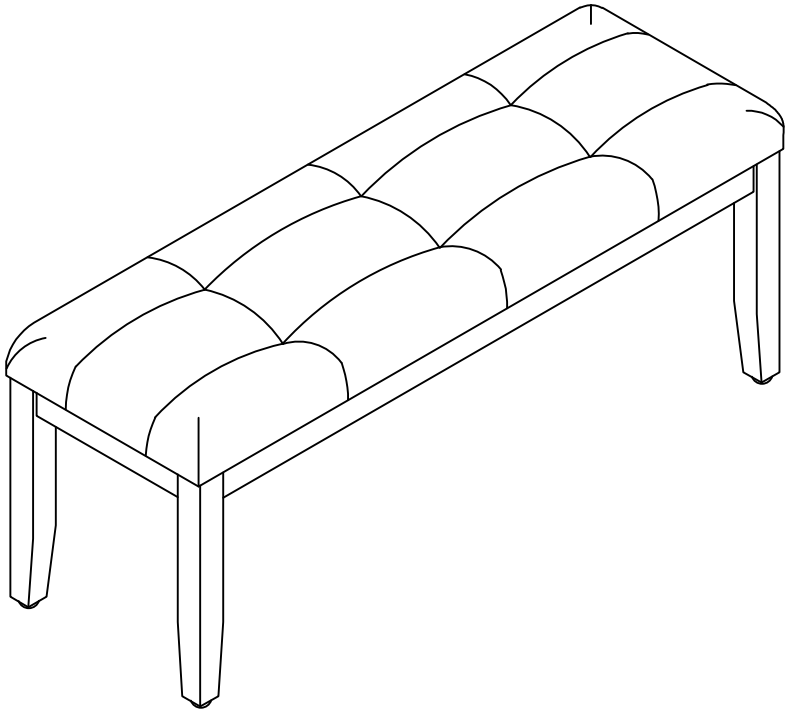

NOTE: For questions about parts or assembly please email support@meridianfurnitureusa.com or call us at 718-758-4455.