ASSEMBLY INSTRUCTIONS

88039-DT84/88040-DT84-DINING TABLE

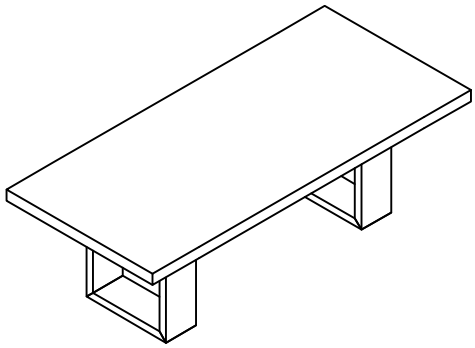

+Do Not Use Power Tools



+Suggested Adults

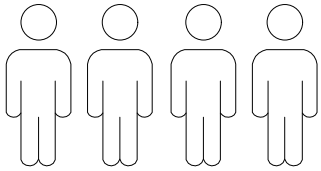

NOTE: For questions about parts or assembly please email support@meridianfurnitureusa.com

or call us at 718-758-4455.

1 Read instructions cover to cover.
2 Save all packaging until assembly is completed

+Parts Included

(1) Table Top
(1pc)

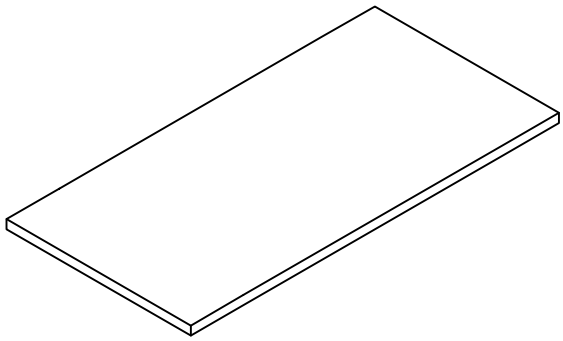

(2) Leg
(2pcs)

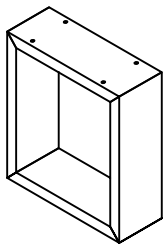

1 IMPORTANT SAFETY INFORMATION

Do not assemble the product if any of the following parts arrived damaged:
Part #(1)- Table Top
Part #(2)- Leg

2 IMPORTANT ASSEMBLY INFORMATION

Assembly Step (1) Use Bolt **A**, to connect Part (2) to Part (1).

*** Warning:** Do not over tighten screws

+Hardware Included

(A) Allen Bolt
(8pcs)

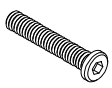

5/16"*83mm

(B) Spring washer
(8pcs)



5/16"

(C) Flat washer
(8pcs)



5/16"*22*1.5mm

(D) Allen key
(1pcs)



M5

ASSEMBLY INSTRUCTIONS

88039-DT84/88040-DT84-DINING TABLE-84"x44"x30"

①

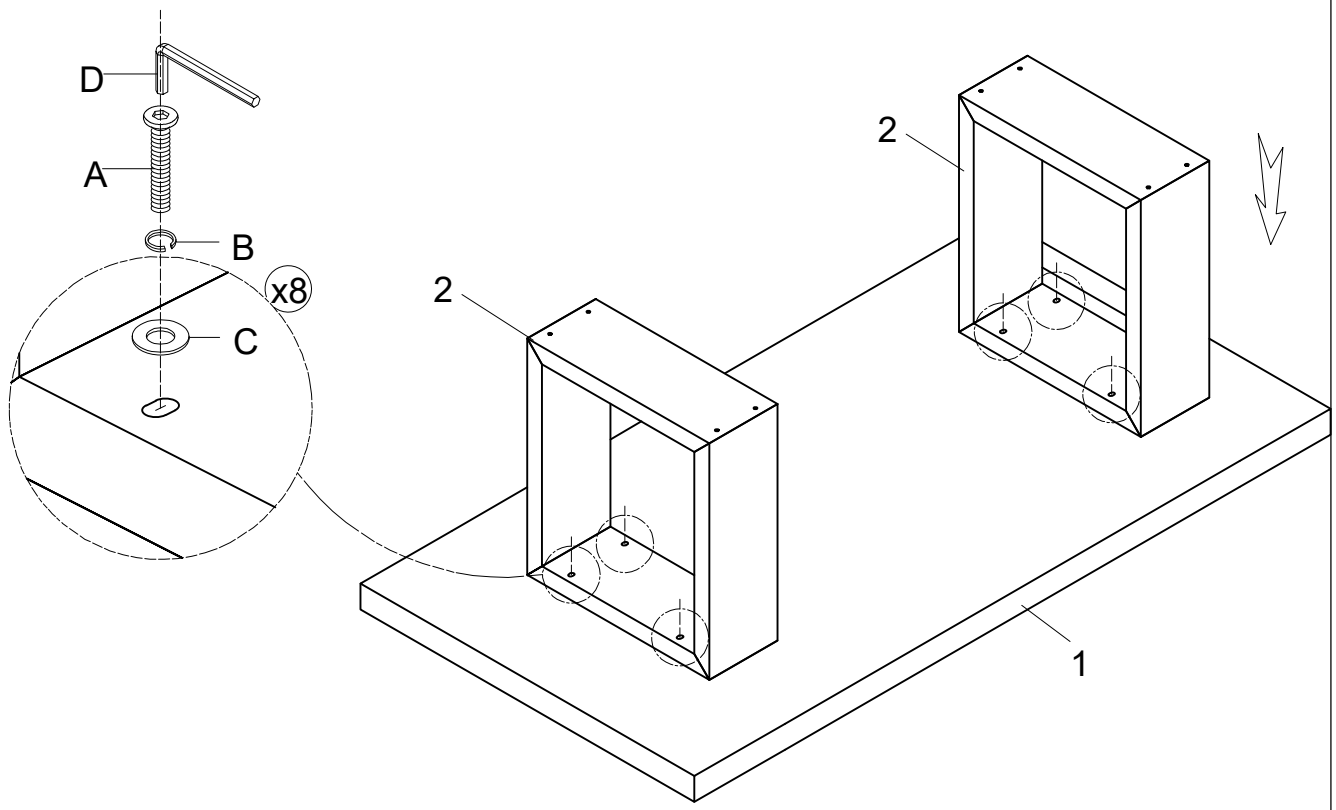

②

Completed

Genuine marble table top - Four personnel required for handling.
Maintain the table legs off the floor during rotation

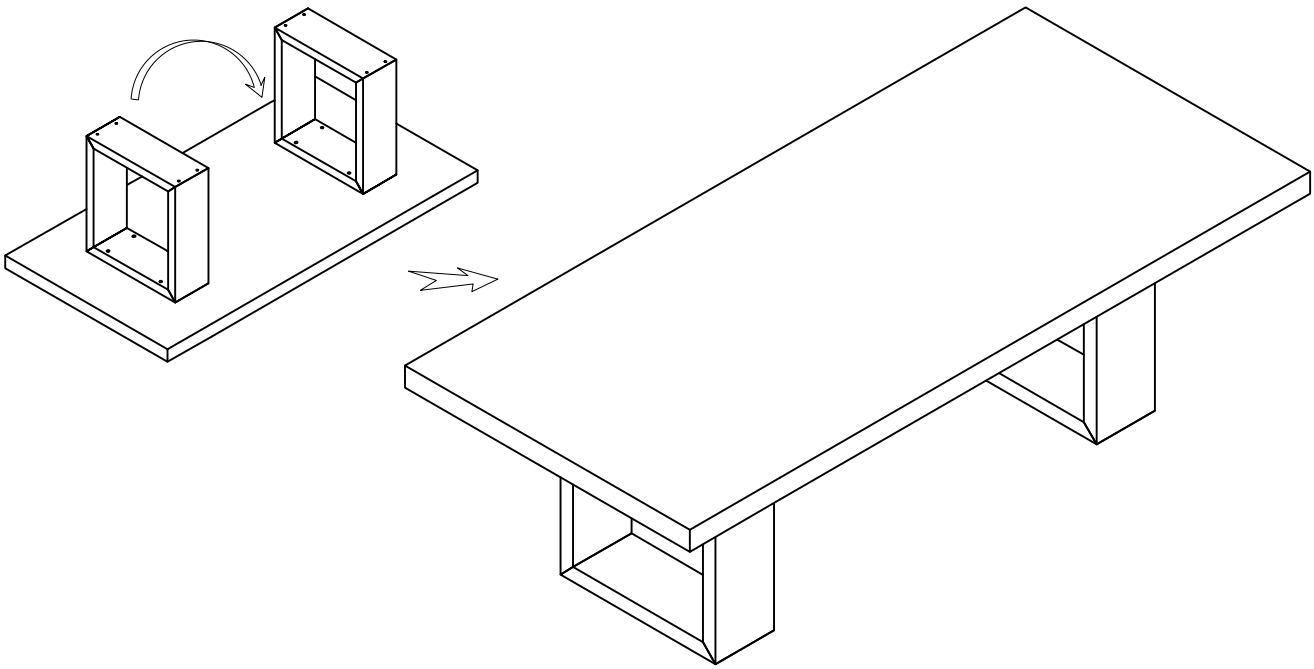

NOTE: For questions about parts or assembly please email support@meridianfurnitureusa.com or call us at 718-758-4455.

www.MeridianFurnitureUSA.com | support@meridianfurnitureusa.com