ASSEMBLY INSTRUCTIONS
SKU / ITEM # - 843 - CH

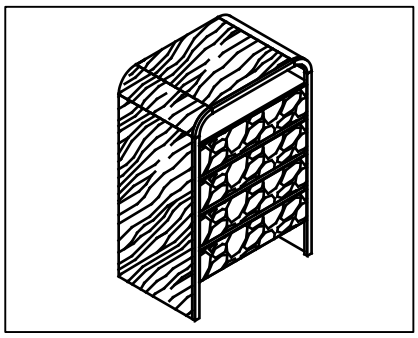

+ Do Not Use power Tools



+ Suggested Adults



Note: For questions about pares or assembly please email support@ meridianfurnitureusa.com or call us at 718- 758- 4455

1 Read instructions cover to cover.

2 Save all packaging until assembly is completed.

1 IMPORTANT SAFETY INFORMATION

Do not assemble the product if any of the following parts arrived damaged:

Part# - Chest

2 IMPORTANT ASSEMBLY INFORMATION

*Warning: Do not over tighten screws, or it could damage the Table Top.

+ Parts Included

① 1PC

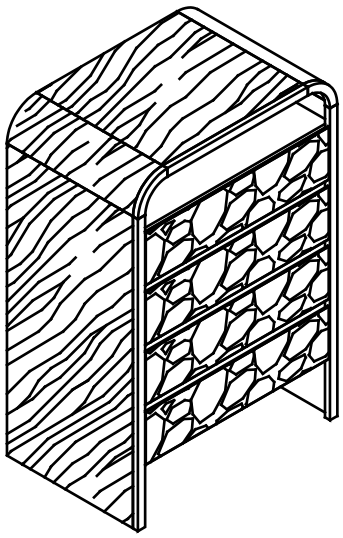

+ Hardware Included

A



Anti Tipping Kit

ASSEMBLY INSTRUCTIONS
SKU/ ITEM# - 843 - CH

1

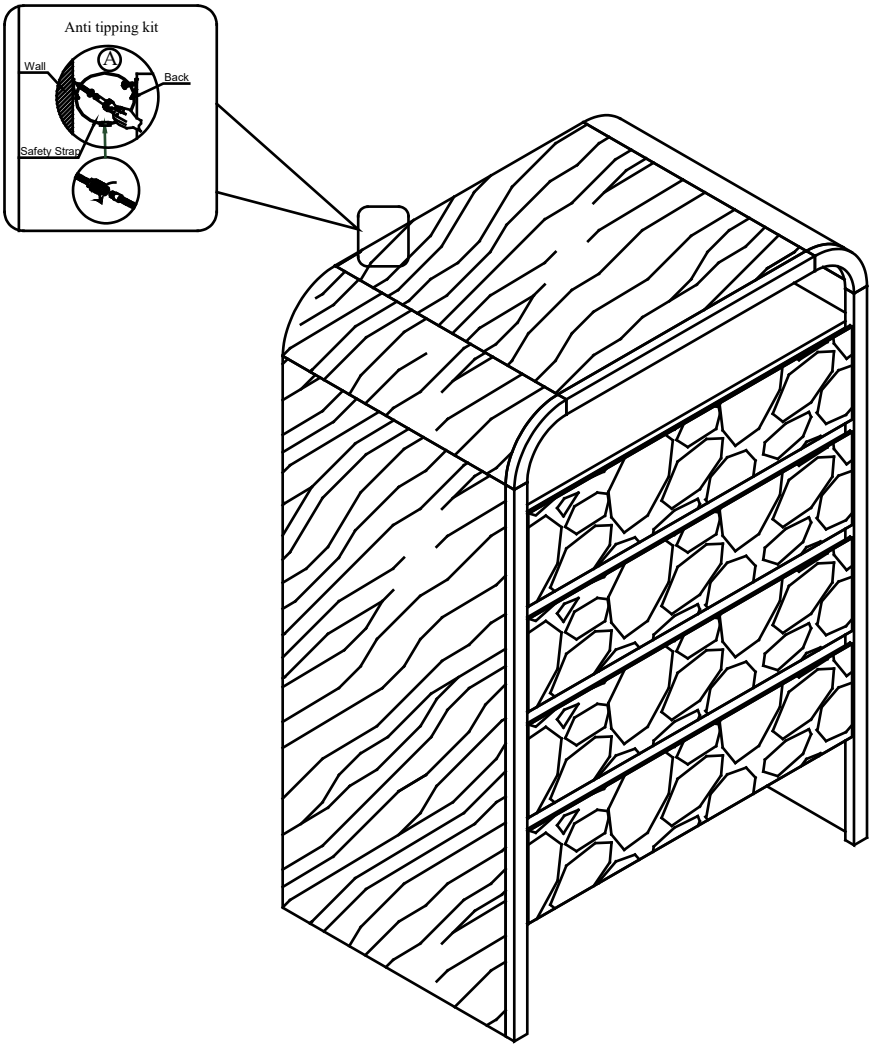

NOTE: For questions about pares or assembly please email
support@ meridianfurnitureusa.com or call us at 718- 758- 4455