ASSEMBLY INSTRUCTIONS

830/831 Side table

meridian furniture

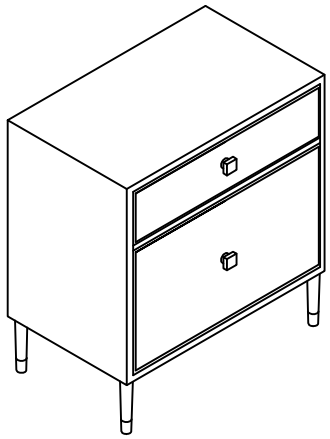

+Do Not Use Power Tools



+Suggested Adults



NOTE: For questions about parts or assembly please email support@meridianfurnitureusa.com or call us at 718-758-4455.

1 Read instructions cover to cover.
2 Save all packaging until assembly is completed

1 IMPORTANT SAFETY INFORMATION

Do not assemble the product if any of the following parts arrived damaged:
Part① - Side Tabel Body
Part② - Legs

Do not assemble if any of the following Hardware parts are missing:
Part A - Flat Washers
Part B - Spring Washers
Part C - Allen Bolts
Part D - Allen Key

2 IMPORTANT ASSEMBLY INFORMATION

Assembly Step If loosening persists, please make sure to tighten all the bolts periodically, or use a thread locker adhesive.

+Parts Included

① Side Table Body (1 pc)

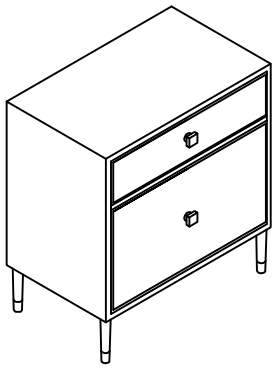

② Leg (4 pcs)

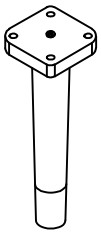

+Hardware Included

A Flat Washer (16 pcs)



B Spring Washer (16 pcs)



C Allen Bolt (16 pcs)



D Allen Key (1 pc)



ASSEMBLY INSTRUCTIONS

830/831 Side table

meridian furniture

1

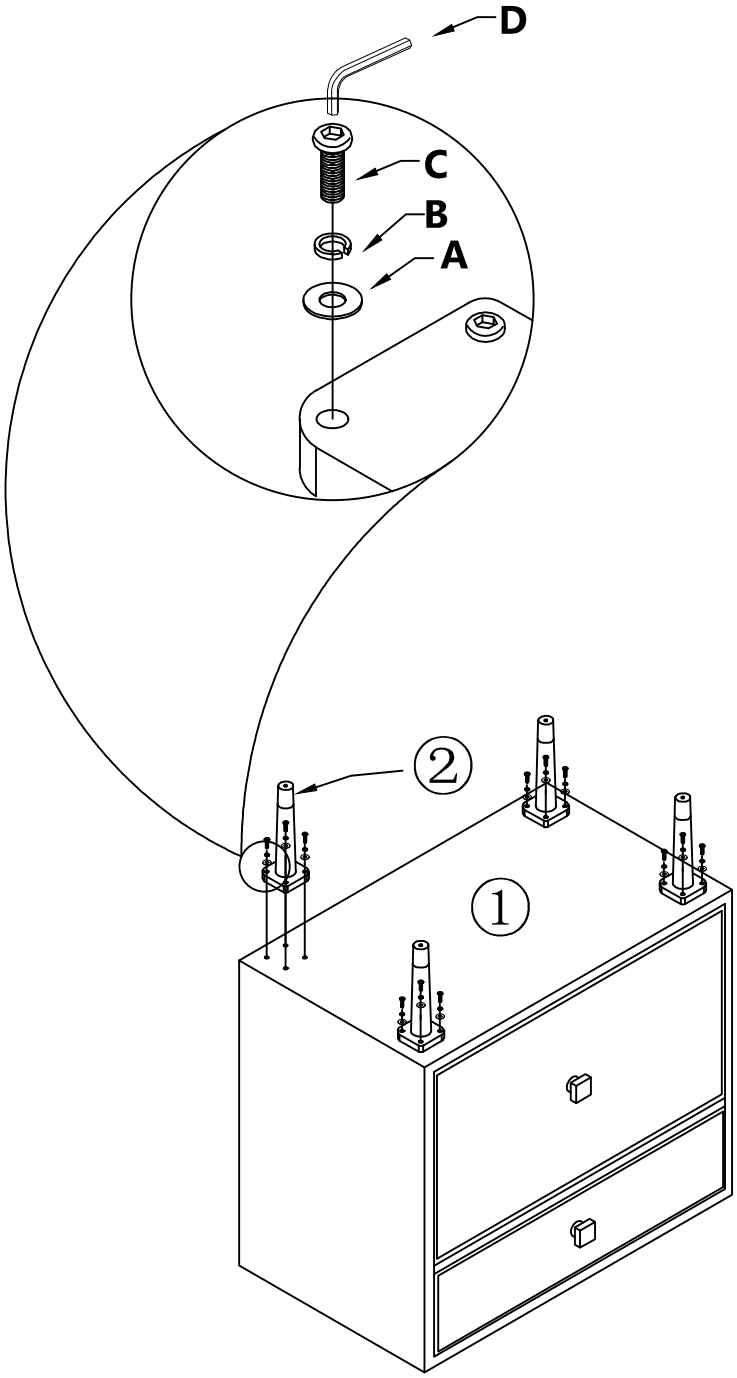

NOTE: For questions about parts or assembly please email support@meridianfurnitureusa.com or call us at 718-758-4455.

Hinges Adjustment Facilities

Warning : To ensure all hinges continue to work smoothly, pls check them regularly and adjust them necessory.

Question 1

How to adjust the two door are not aligned and lower with screw adjustment?

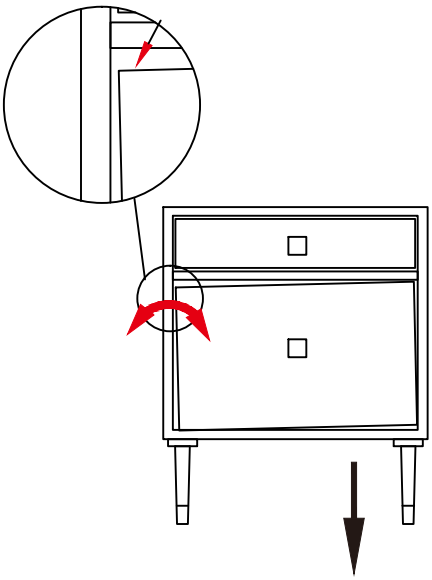

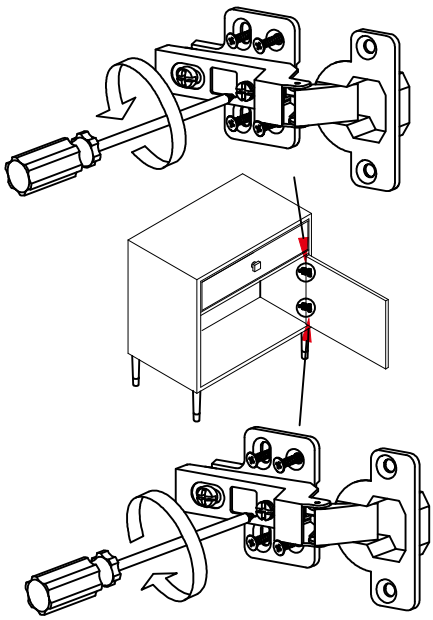

Turn right middle bolt adjuster properly until door is balanced

Question 2

How to adjust the two door are not aligned and higher with screw adjustment?

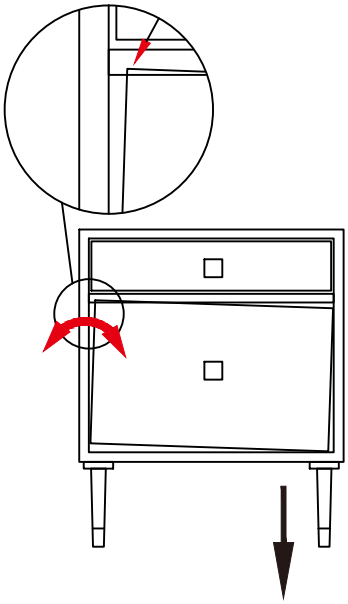

Turn right middle bolt adjuster properly until door is balanced

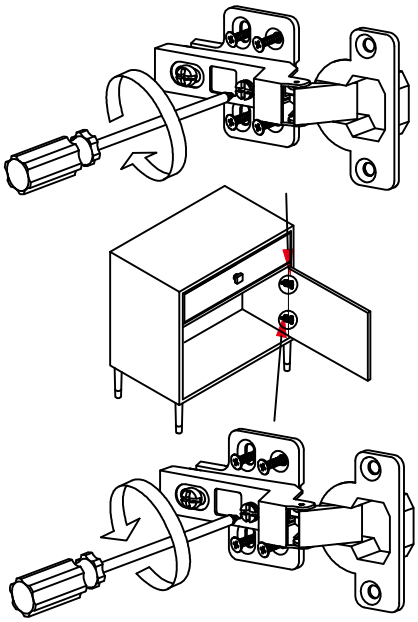

Turn left middle bolt adjuster properly until door is balanced

NOTE: For questions about parts or assembly please email support@meridianfurnitureusa.com or call us at 718-758-4455.

Hinges Adjustment Facilities

Warning : To ensure all hinges continue to work smoothly, pls check them regularly and adjust them necessory.

Question 3

How to adjust the door gap at side with screw adjustment?

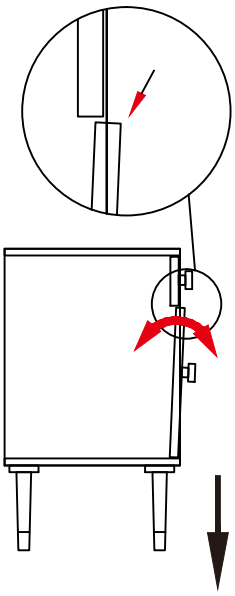

Turn left the adjuster properly until door is balanced

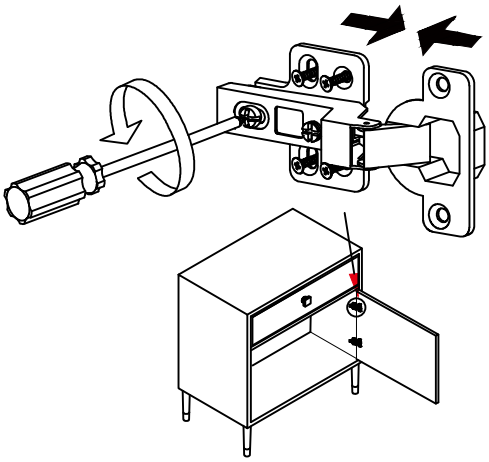

Question 4

How to adjust the door gap at at front with screw adjustment?

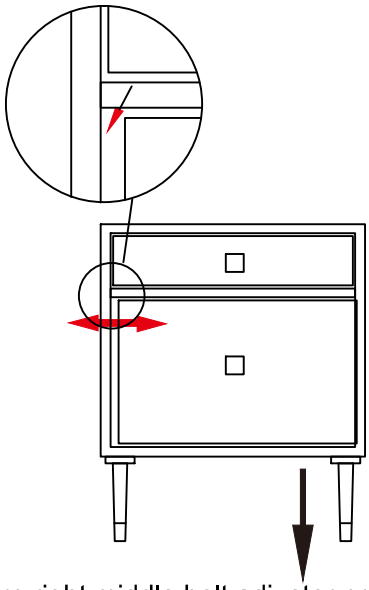

Turn right middle bolt adjuster properly until door is balanced

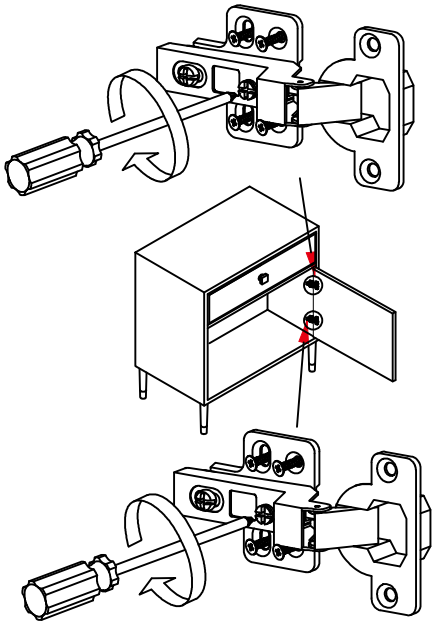

Turn right middle bolt adjuster properly until door is balanced

NOTE: For questions about parts or assembly please email support@meridianfurnitureusa.com or call us at 718-758-4455.