ASSEMBLY INSTRUCTIONS
SKU/ ITEM# - 818 - T

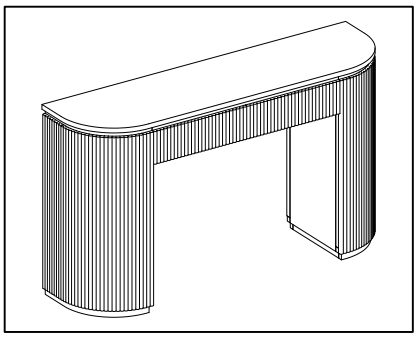

power Tools



+ Suggested Adults



Note: For questions about pares or assembly please email support@meridianfurnitureusa.com or call us at 718-758-4455

1 Read instructions cover to cover.

2 Save all packaging until assembly is completed.

+ Parts Included

① Top
(1PC)

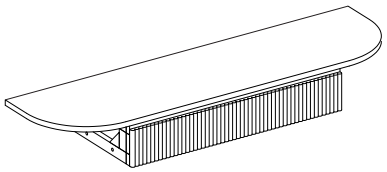

② Dust panel
(2PCS)

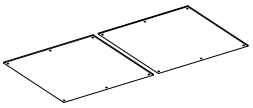

③ Base
(2PCS)

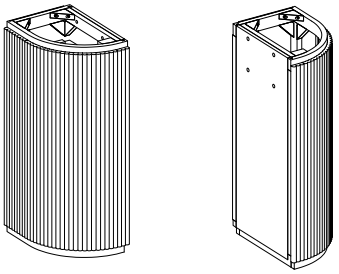

1 IMPORTANT SAFETY INFORMATION

Do not assemble the product if any of the following parts arrived damaged:

Part: - Top

- Dust panel

- Base

2 IMPORTANT ASSEMBLY

*Warning: Do not over tighten screws,or it could damage the Table Top.

A



Allen Wrench (4MM)
(1pc)

B

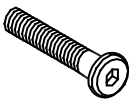

Bolt (M8x70mm)
(8pcs)

C



Washer
(8pcs)

D



Flat Washer
(8pcs)

E



Screw M4x15
(12pcs)

ASSEMBLY INSTRUCTIONS
SKU/ ITEM# - 818 - T

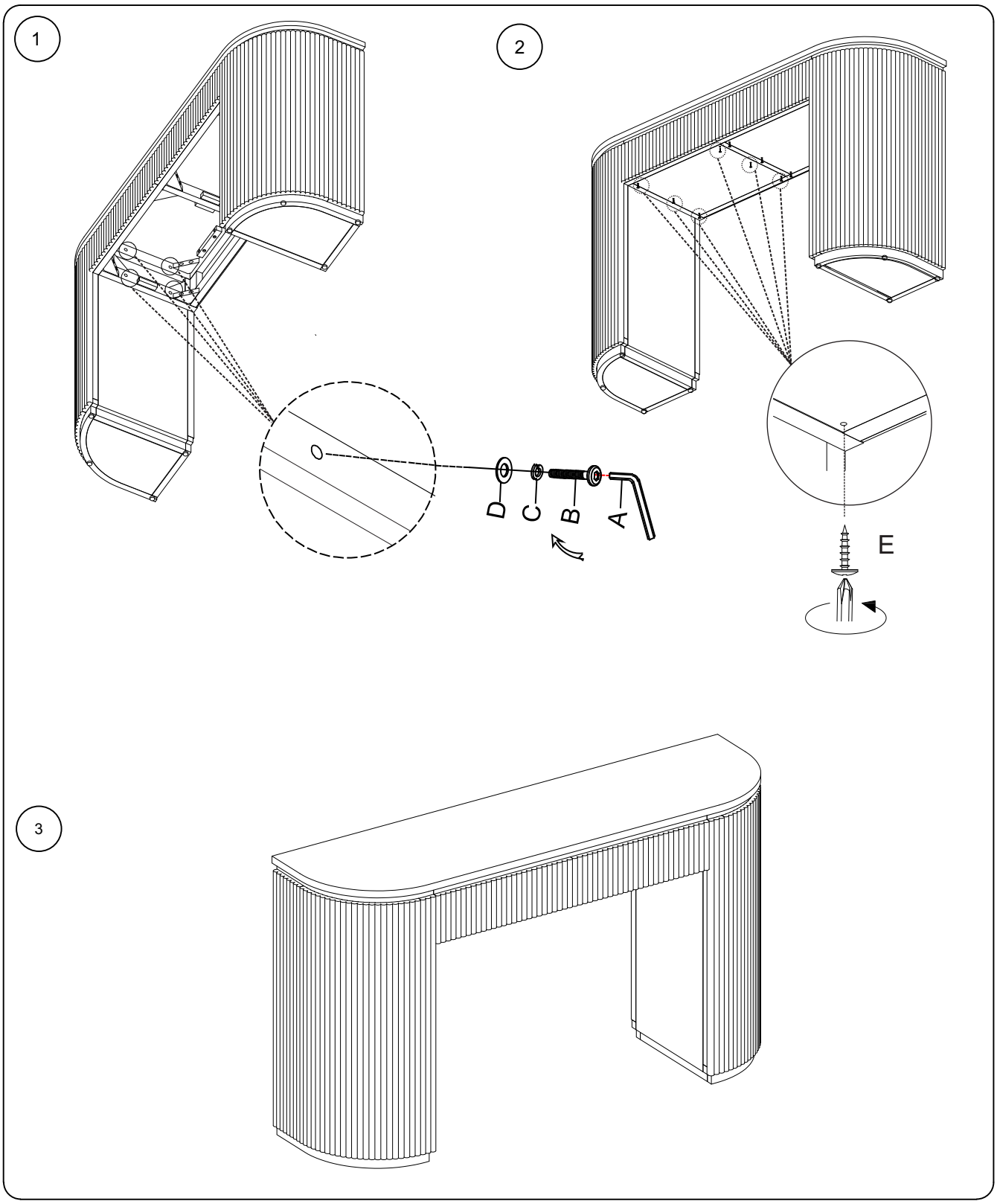

NOTE: For questions about pares or assembly please email
support@meridianfurnitureusa.com or call us at 718-758-4455