ASSEMBLY INSTRUCTIONS

SKU - 77072 Server

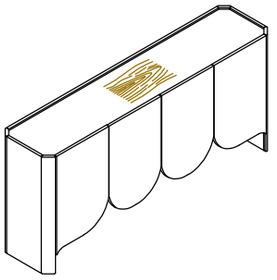

+ Do Not Use power Tools



+ Suggested Adults

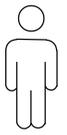

Note: For questions about pares or assembly please email support@meridianfurnitureusa.com or call us at 717-758-4455

1 Read ins tructions cover to cover.

2 Save a ll packaging until as s embly is completed.

1 IMPORTANT SAFETY INFORMATION

Do not assemble the product if any of the following parts arrived damaged:

Part# - **Server**

2 IMPORTANT ASSEMBLY INFORMATION

*Warning: Do not over tighten screws,or it could damage the Sideboard

+ Parts Included

1

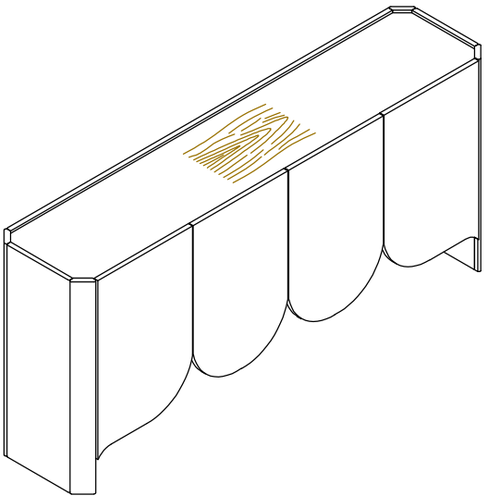

1PC

+ Hardware Included

A

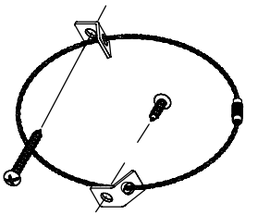

Anti Tipping Kit

2PCS

ASSEMBLY INSTRUCTIONS

SKU - 77072 Server

1

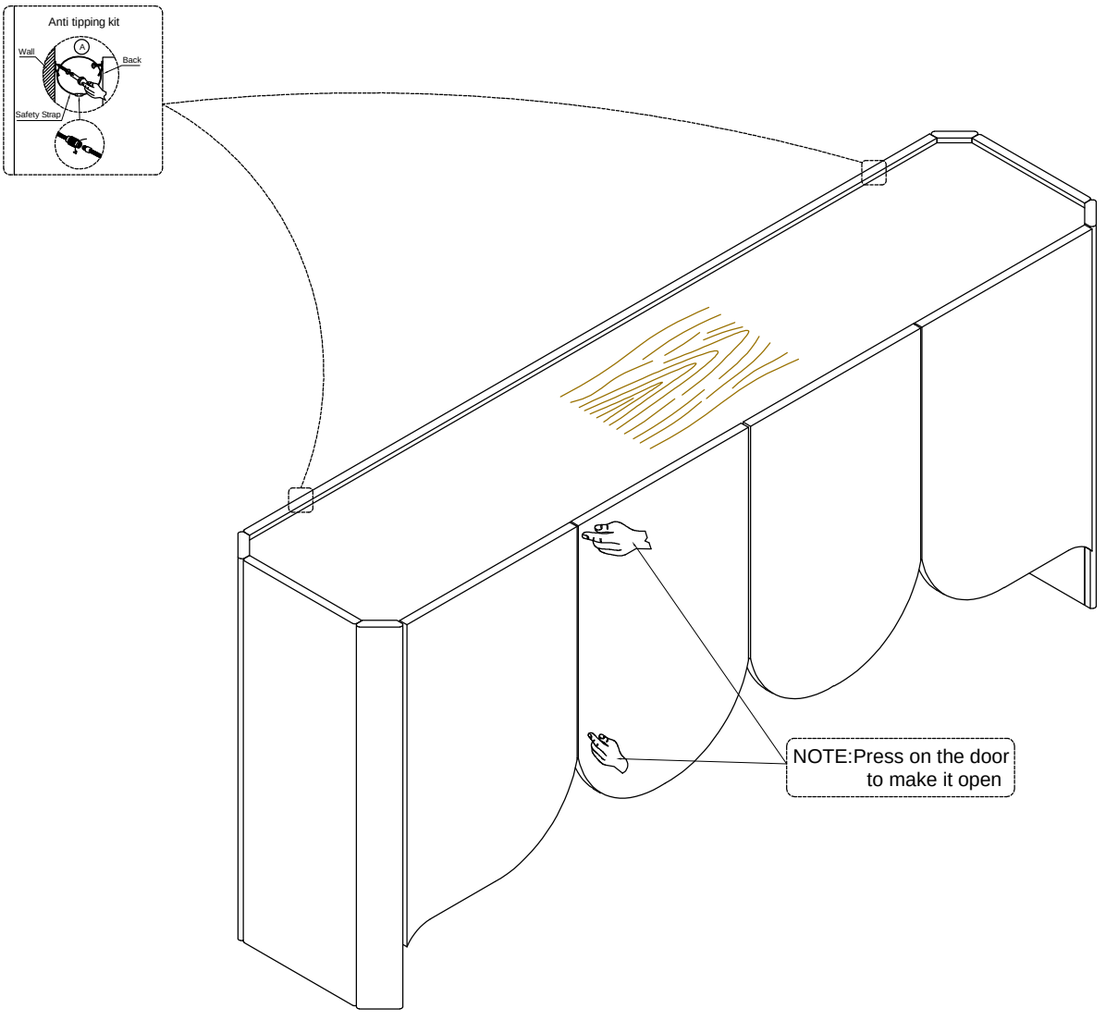

ASSEMBLY INSTRUCTIONS

SKU - 77072 Server

Hinges Adjustment Facilities

Warning : To ensure all hinges continue to work smoothly, pls check them regularly and adjust them necessory.

Question 1

How to adjust the two door are not aligned and lower with screw adjustment?

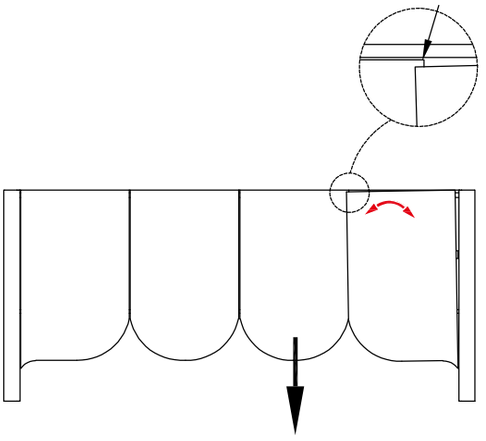

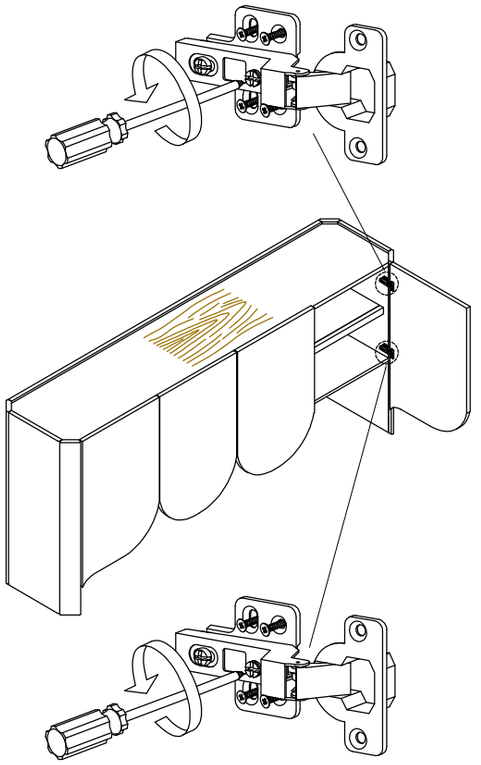

Turn right middle bolt adjuster properly until door is balanced

Question 2

How to adjust the two door are not aligned and higher with screw adjustment?

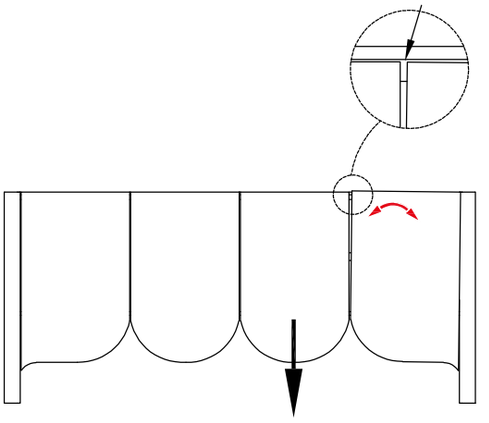

Turn right middle bolt adjuster properly until door is balanced

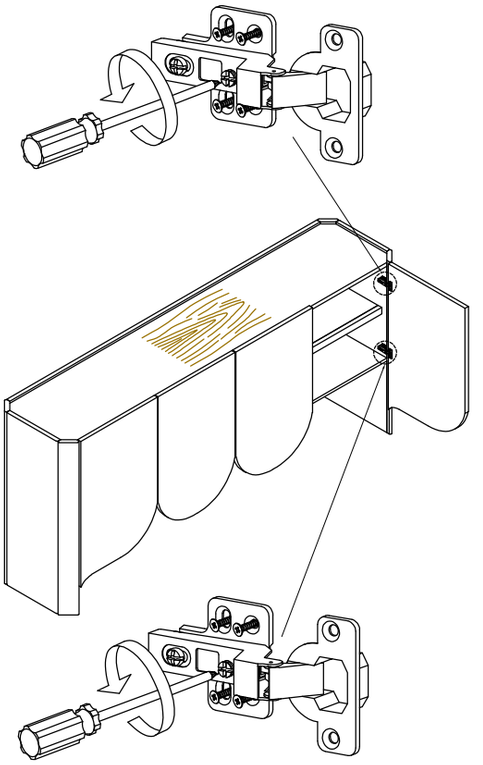

Turn left middle bolt adjuster properly until door is balanced

Note: For questions about pares or assembly please email support@meridianfurnitureusa.com or call us at 717-758-4455

www.MeridianFurnitureUSA.com I support@meridianfurnitureusa.com

ASSEMBLY INSTRUCTIONS

SKU - 77072 Server

Hinges Adjustment Facilities

Warning : To ensure all hinges continue to work smoothly, pls check them regularly and adjust them necessory.

Question 3

How to adjust the door gap at side with screw adjustment?

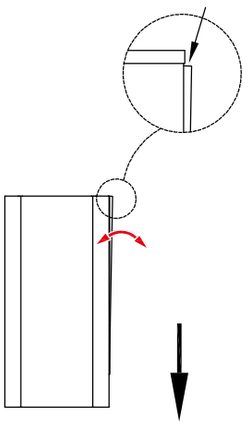

Turn left the adjuster properly until door is balanced

Question 4

How to adjust the door gap at at front with screw adjustment?

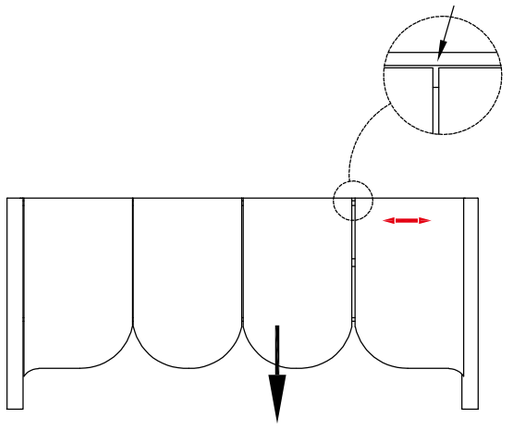

Turn right middle bolt adjuster properly until door is balanced

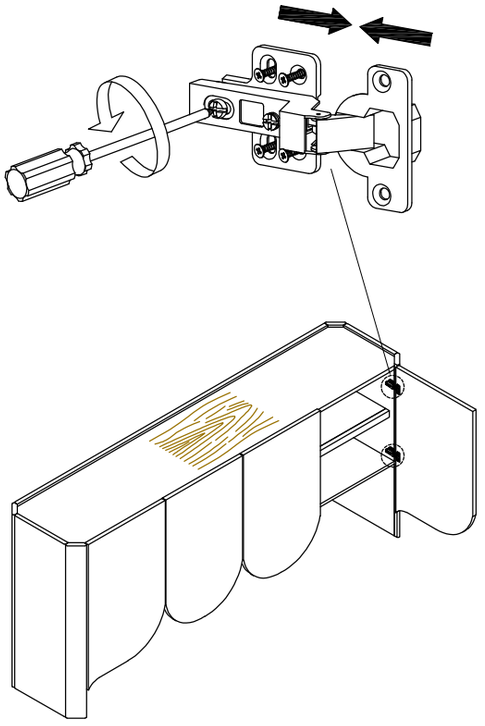

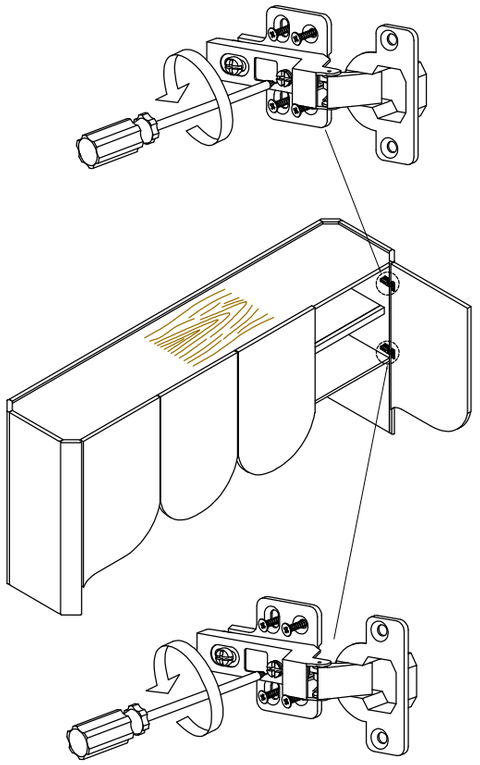

Turn right middle bolt adjuster properly until door is balanced