ASSEMBLY INSTRUCTIONS

77057

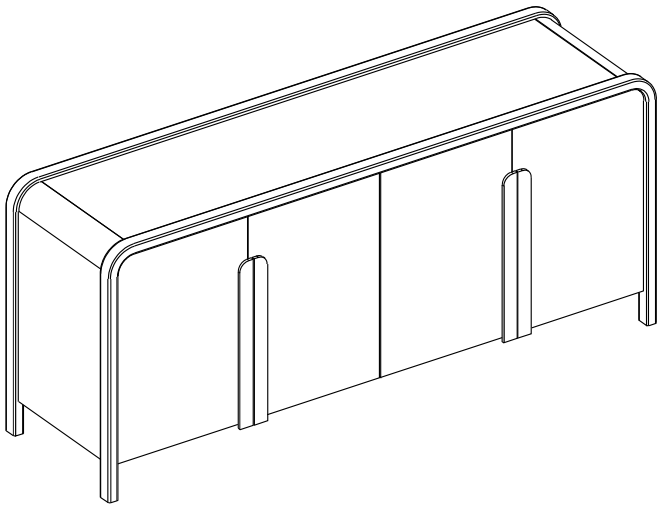

+ Do Not Use Power Tools



+ Suggested Adults



NOTE: For questions about parts or assembly please email support@meridianfurnitureusa.com or call us at 718-758-4455.

1 Read instructions cover to cover.
2 Save all packaging until assembly is completed.

+ Parts Included

① Cabinet (1 pc)

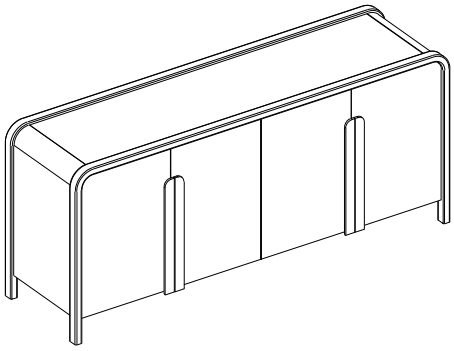

1 IMPORTANT SAFETY INFORMATION

Do not assemble the product if the parts arrived damaged.

Do not assemble if Hardware parts are missing.

2 IMPORTANT ASSEMBLY INFORMATION

Assembly Step lf loosening persists, please make sure to tighten all the bolts periodically, or use a thread locker adhesive.

+ Hardware Included

Ⓐ Anti-tip kits

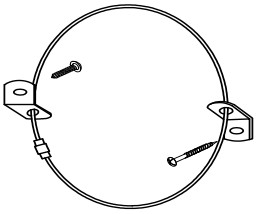

(2pcs)

ASSEMBLY INSTRUCTIONS

77054

①

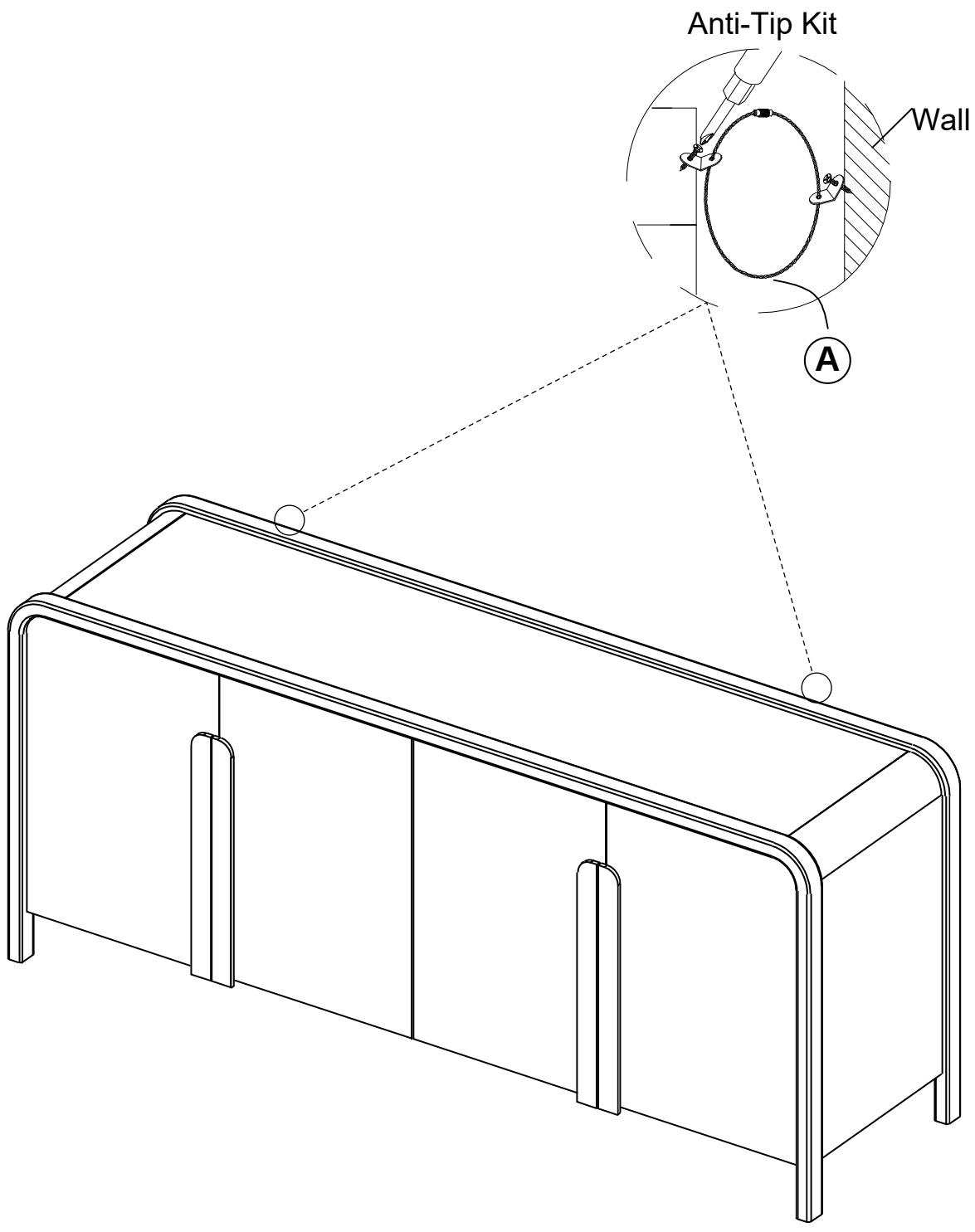

NOTE:For questions about parts or assembly please emai
support@meridianfurnitureusa.com or call us at 718-758-4455.

www.MeridianFurnitureUSA.com| support (@meridianfurnitureusa.com

ASSEMBLY INSTRUCTIONS

77057

①

Hinges Adjustment Facilities

Warning : To ensure all hinges continue to work smoothly, pls check them regularly and adjust them necessory.

Question 1

How to adjust the two door are not aligned and lower with screw adjustment?

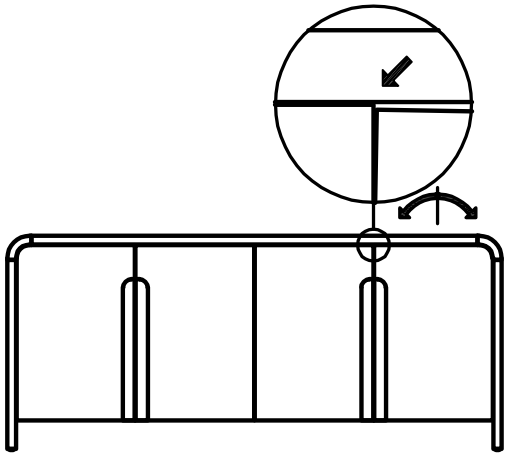

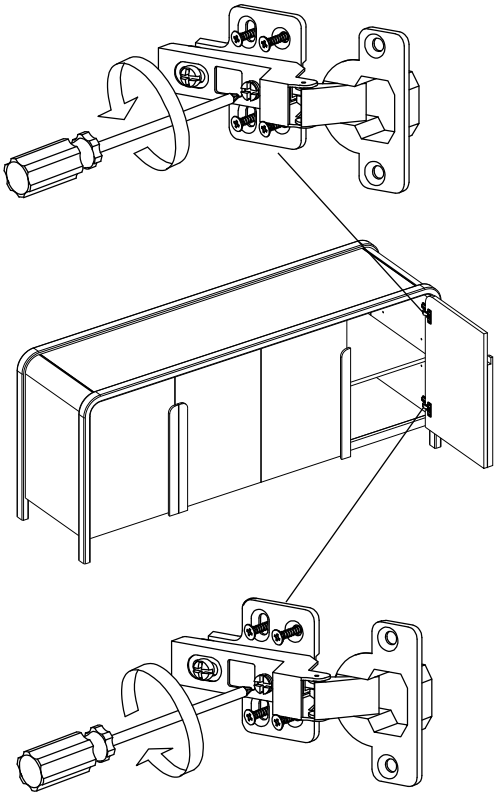

Turn right middle bolt adjuster properly until door is balanced

Question 2

How to adjust the two door are not aligned and higher with screw adjustment?

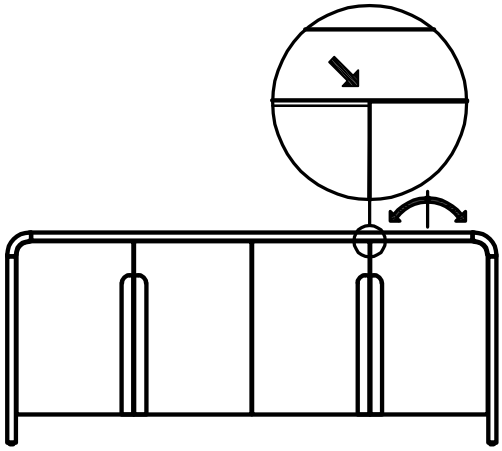

Turn right middle bolt adjuster properly until door is balanced

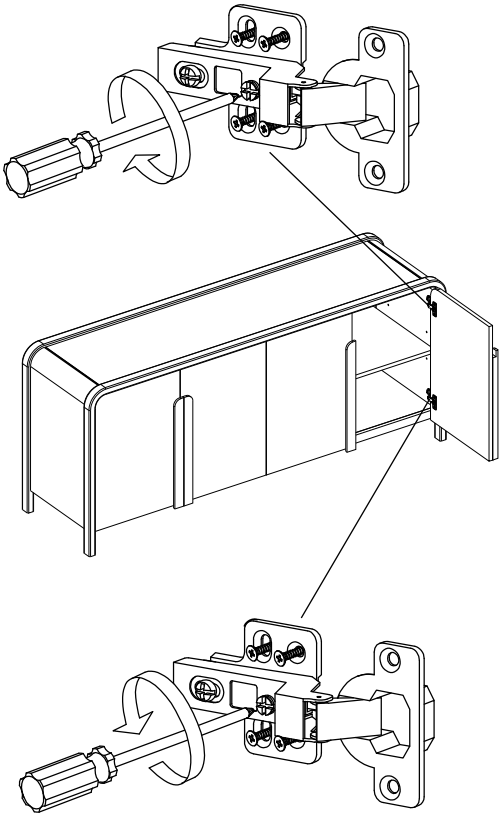

Turn left middle bolt adjuster properly until door is balanced

NOTE: For questions about parts or assembly please email support@meridianfurnitureusa.com or call us at 718-758-4455.

ASSEMBLY INSTRUCTIONS

77057

②

Hinges Adjustment Facilities

Warning : To ensure all hinges continue to work smoothly, pls check them regularly and adjust them necessory.

Question 3

How to adjust the door gap at side with screw adjustment?

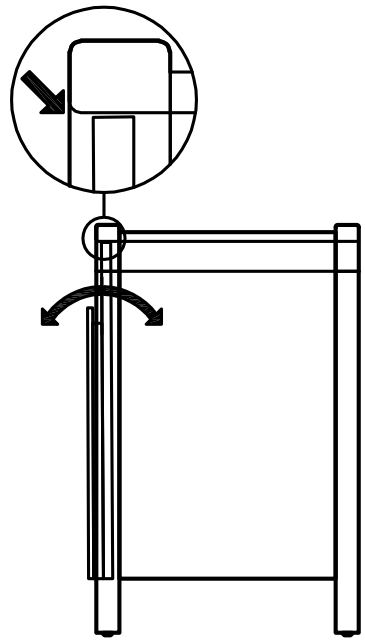

Turn left the adjuster properly until door is balanced

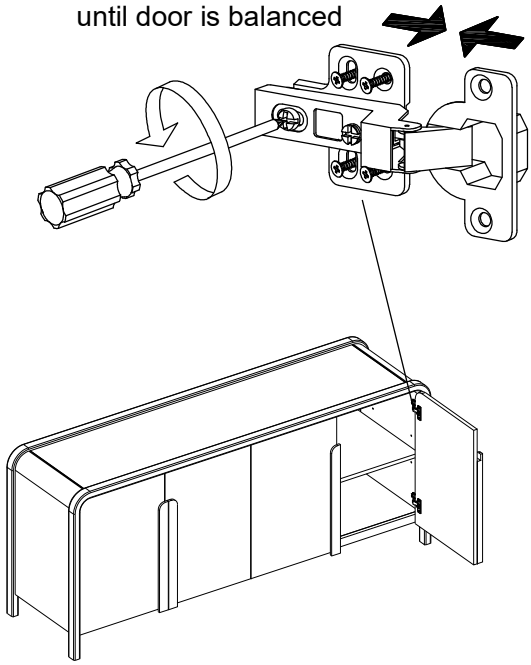

Question 4

How to adjust the door gap at at front with screw adjustment?

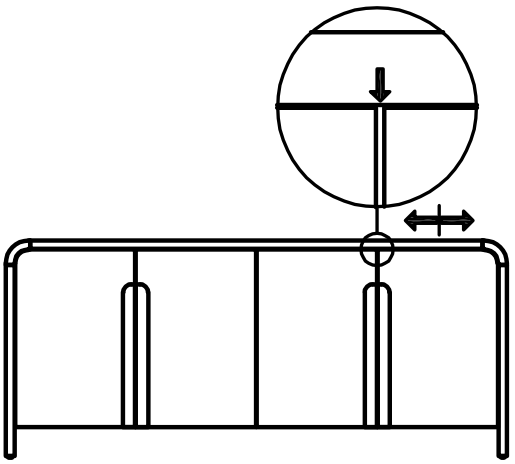

Turn right middle bolt adjuster properly until door is balanced

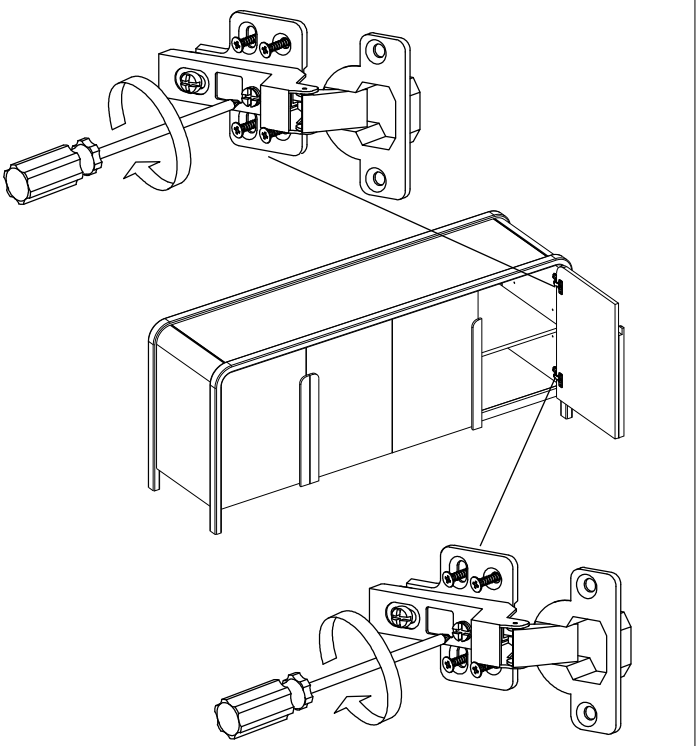

Turn right middle bolt adjuster properly until door is balanced