ASSEMBLY INSTRUCTIONS

77012-ET

meridian furniture

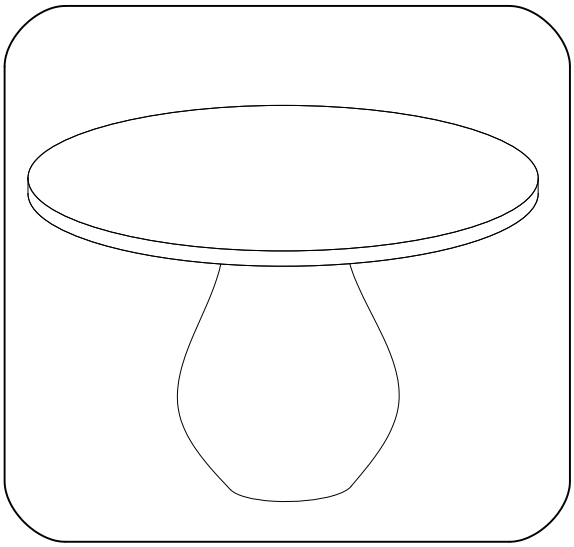

+ Parts Included

1 WoodenTop
1 Pcs

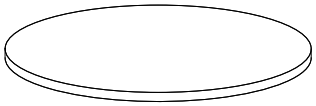

2 Wooden Base
1 Pcs

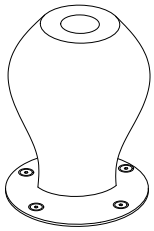

DO NOT USE POWER TOOLS



SUGGESTED ADULTS



NOTE: For Questions about parts or assembly please email support@meridianfurnitureusa.com or call us at 718-758-4455

1 Read instructions cover to cover.
2 Save all packaging until assembly in completed.

1-IMPORTANT SAFETY INFORMATION

Do Not assemble the product if any of the following parts arrived damaged:
Part # -Base
Part # -Table top
Part # -Bottom Shelf

2-IMPORTANT ASSEMBLY INFORMATION

Assembly Step

1-Place the tabletop upside down on a soft,padded surface to avoid scratches or damage.
2-Position the base over the underside of the tabletop, aligning it with the pre drilled holes.
3-Insert the screws into the aligned holes and tighten them partially (Not fully tighten at this stage)
4-Once all screws are in place,tighten them securely to ensure an firm and stable assembly.
5-Carefully turn the table upright.Your product is now ready to use.
***Warning:** Do not over tighten screws,or it could damage the Table Top.

+ Hardware Included

A Allen Bolt-M8x20
4 Pcs



B Washer-25mm
4 Pcs



C Allen Key-M5
1 Pcs



ASSEMBLY INSTRUCTIONS

77012-ET

1

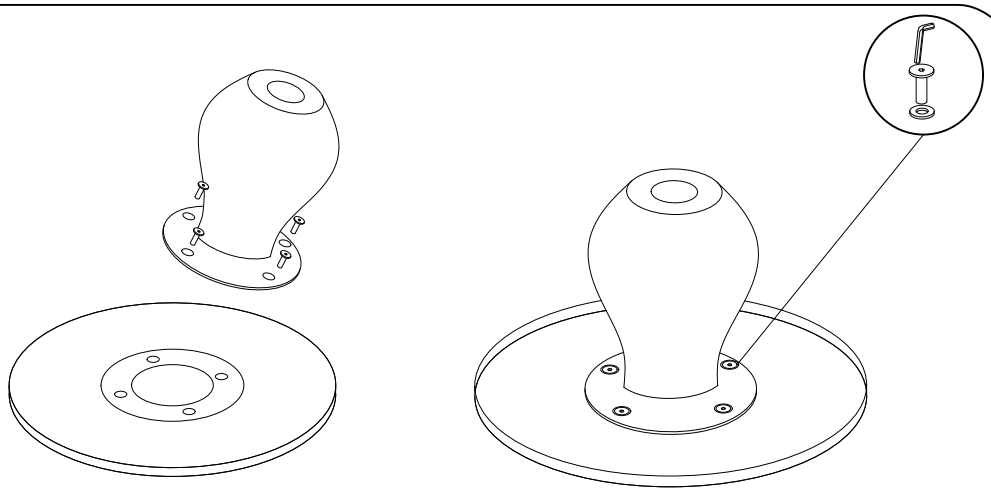

Note: Do not over tightens screws

2

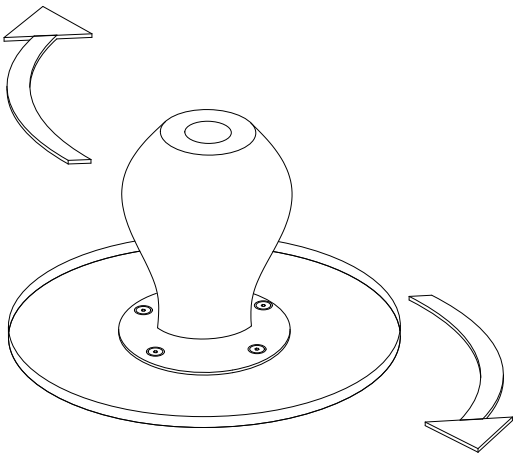

Note: Do not over tightens screws

3

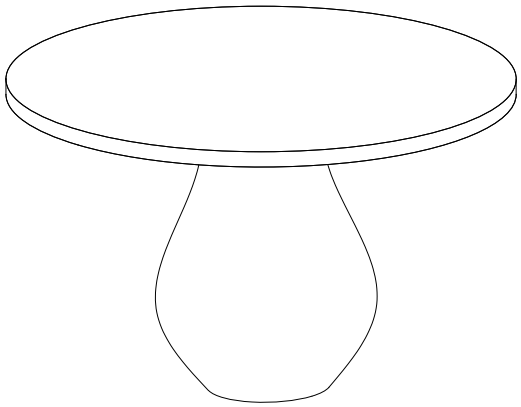

Note: Do not over tightens screws

Note: For Questions about parts or assembly please email Support@meridianfurnitureusa.com or call us at 718-758-4455