ASSEMBLY INSTRUCTIONS
SKU/ITEM# - 768-T

meridian furniture

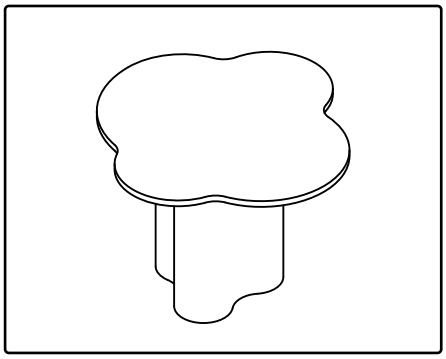

+ Do Not Use Power Tools



+ Suggested Adults

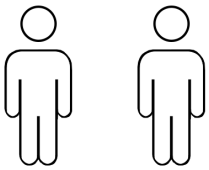

NOTE: For questions about parts or assembly please email support@meridianfurnitureusa.com or call us at 718-758-4455.

1 Read instructions cover to cover.

2 Save all packaging until assembly is completed.

+ Parts Included

① x1

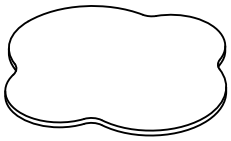

② x1

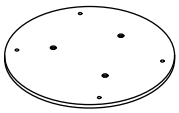

③ x1

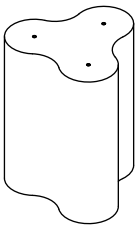

1 IMPORTANT SAFETY INFORMATION

Do not assemble the product if any of the following parts arrived damaged:

Part ① - Table top
Part ② - Connection panel
Part ③ - Base

2 IMPORTANT ASSEMBLY INFORMATION

Assembly Step① Use bolt assemble the both base and connection panel together.

Assembly Step② Use bolt assemble the both top and connection panel together .

*Warning: Do not over tighten screws, or it could damage the Table Top.

+ Hardware Included

A



Allen Key
M5 1PCS

B



Bolt
M8x35 7PCS

C



Washer
M8x20 7PCS

ASSEMBLY INSTRUCTIONS
SKU/ITEM# - 768-T

1

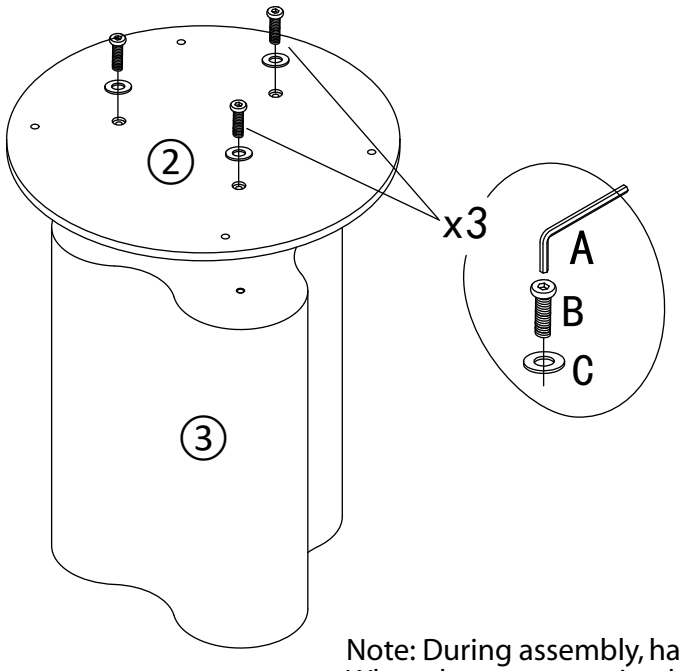

Note: During assembly, hand tighten screws only.
When the screws are in place, tighten completely.

2

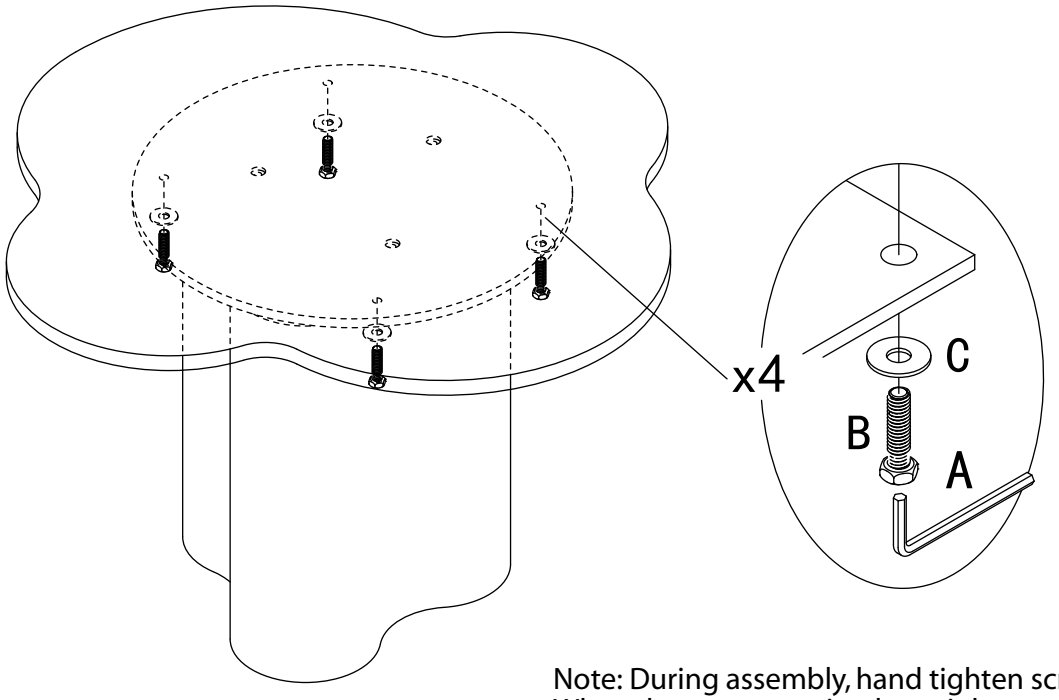

Note: During assembly, hand tighten screws only.
When the screws are in place, tighten completely.

NOTE: For questions about parts or assembly please email
support@meridianfurnitureusa.com or call us at 718-758-4455.