ASSEMBLY INSTRUCTIONS

66072 - KING BED

meridian furniture

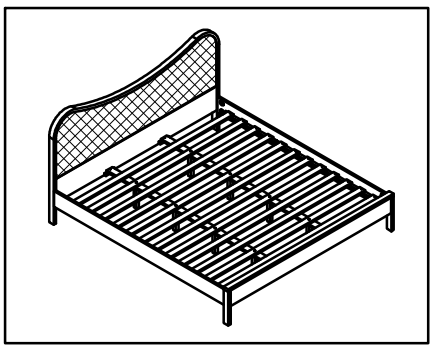

+ Do Not Use Power Tools

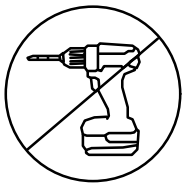

+ Suggested Adults

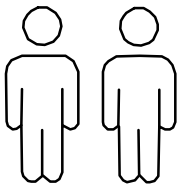

NOTE: For quetsions and about parts or assembly please email support@meridianfurnitureusa.com or call us at 718-758-4455

1 *Read instructions cover to cover.*

2 *Save all packaging until assembly is completed.*

+ Parts Included

① Headboard (1 pcs)



② Footboard (1 pcs)

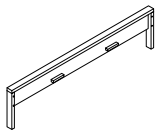

③ Side rail (2 pcs)



④ Center Support Slats (2 pcs)

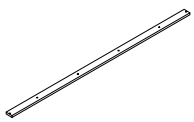

⑤ Slats (12 pcs)

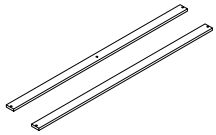

⑥ Support Legs (8 pcs)

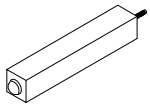

1 IMPORTANT SAFETY INFORMATION

Do not assemble the product if any of the following parts arrived damaged:

Part 1	- Headboard	Part 4	- Center Support Slats
Part 2	- Footboard	Part 5	- Slats
Part 3	- Side rail	Part 6	- Support Legs

2 IMPORTANT ASSEMBLY INFORMATION

Assembly Step Ensure the side rail bracket is fully hooked onto bolt loosely threaded with both washers on the OUTSIDE of the bracket first, then proceed to fully tightening all 4 corners.

+ Hardware Included

A:**Full Thread Bolt (5/16"x 3") = (8pcs)**



B:**Curve washer (5/16") (8pcs)**



C:**Hex. Nut (Ø5/16" x 1/4") (8pcs)**



D:**Open Wrench (#1/2") (1pcs)**

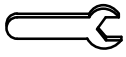

E: **Screw (#4 x 1") (28pcs)**



ASSEMBLY INSTRUCTIONS

66072 - KING BED

meridian. furniture

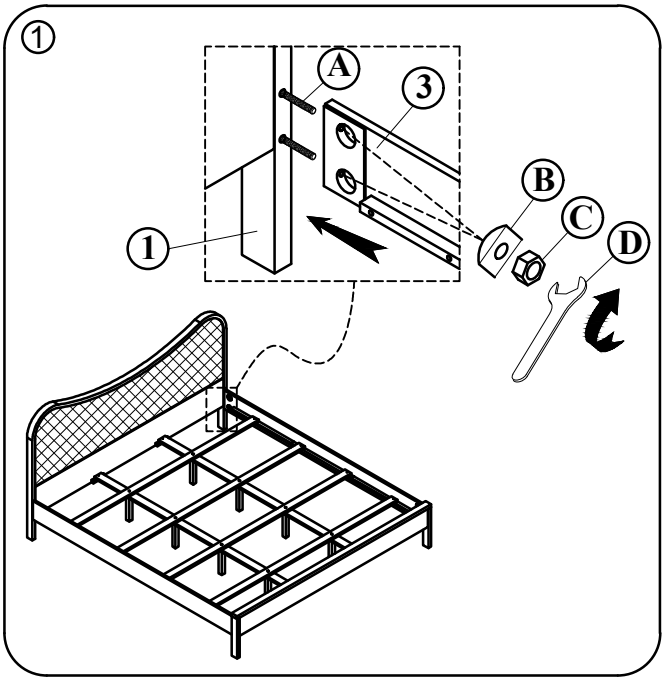

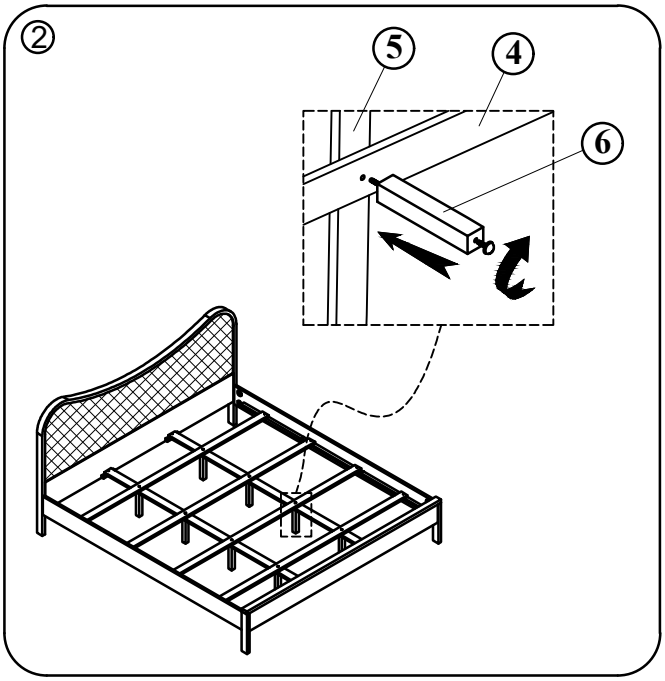

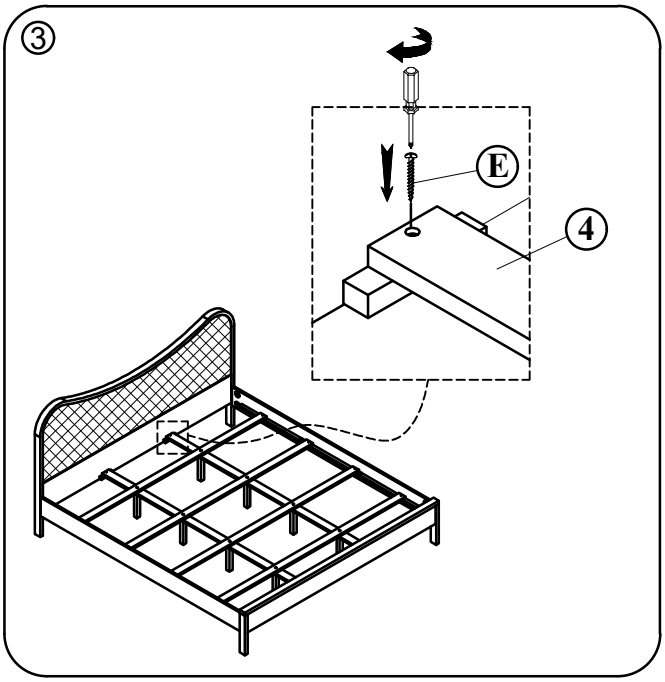

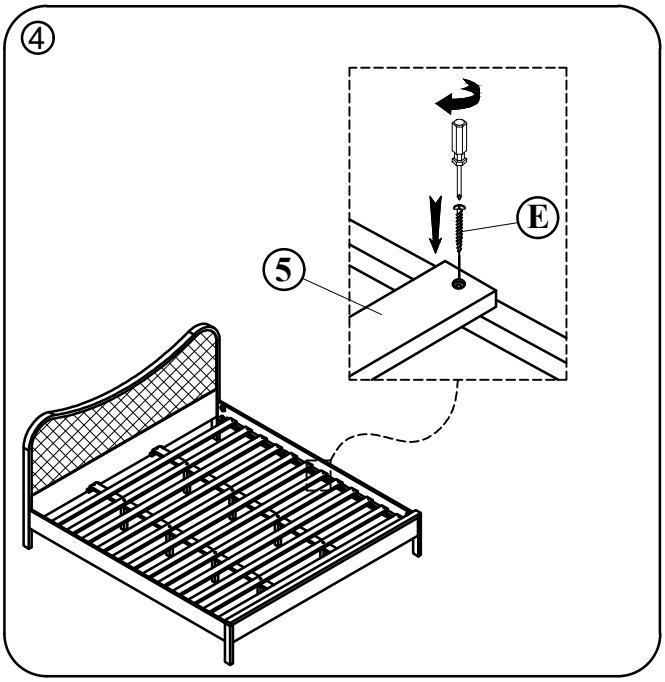

NOTE: For questions about parts or assembly please email support@meridianfurnitureusa.com or call us at 718-758-4455.

www.MeridianFurnitureUSA.com | support@meridianfurnitureusa.com