ASSEMBLY INSTRUCTIONS

SKU - 576 Sideboard

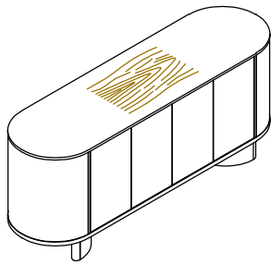

+ Do Not Use power Tools



+ Suggested Adults



Note: For questions about pares or assembly please email support@meridianfurnitureusa.com or call us at 717-758-4455

1 Read ins tructions cover to cover.

2 Save a ll packaging until as s embly is completed.

1 IMPORTANT SAFETY INFORMATION

Do not assemble the product if any of the following parts arrived damaged:

Part# -Sideboard

Part# -Base

Part# -Center Support Leg with Leveler

2 IMPORTANT ASSEMBLY INFORMATION

Assembly step Use Bolt B to connect Part 2 to Part 1, Connect Part 3 to Part 1

*Warning: Do not over tighten screws,or it could damage the Sideboard

+ Parts Included

1

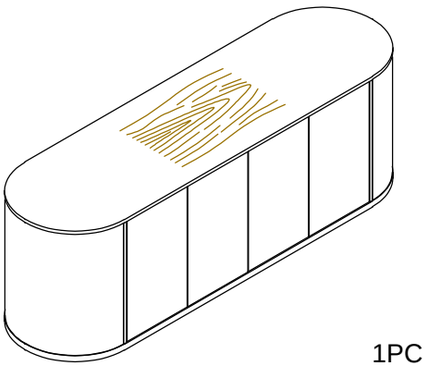

1PC

2

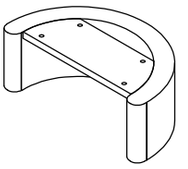

2PCS

3



1PC

+ Hardware Included

A



Allen Wrench (4MM) (1PC)

B

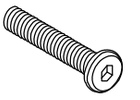

Bolt (5/16 * 1-3/8") (8PCS)

C



Washer (5/16) (8PCS)

D



Flat Washer (5/16 * 3/4") (8PCS)

E

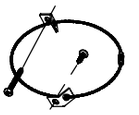

Anti Tipping Kit

ASSEMBLY INSTRUCTIONS

SKU - 576 Sideboard

1

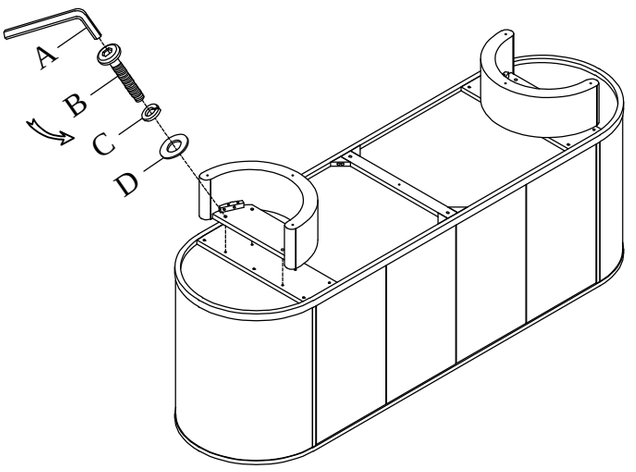

2

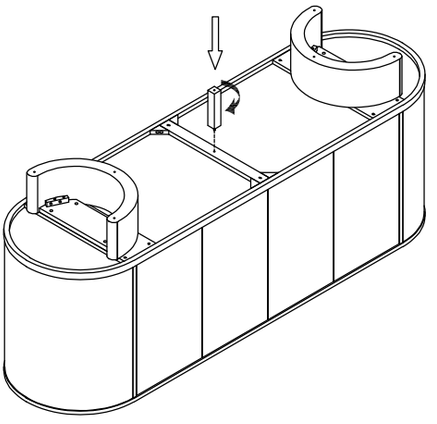

3

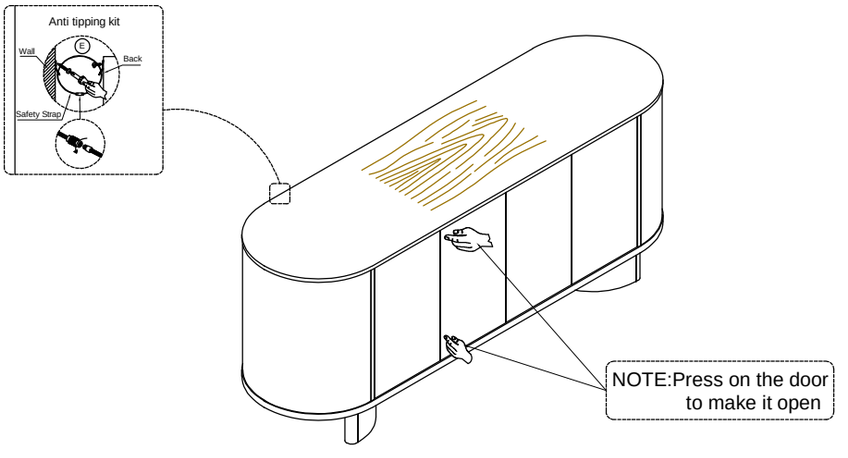

Note: For questions about pares or assembly please email support@meridianfurnitureusa.com or call us at 717-758-4455

www.MeridianFurnitureUSA.com I support@meridianfurnitureusa.com

ASSEMBLY INSTRUCTIONS

SKU - 576 Sideboard

Hinges Adjustment Facilities

Warning : To ensure all hinges continue to work smoothly, pls check them regularly and adjust them necessory.

Question 1

How to adjust the two door are not aligned and lower with screw adjustment?

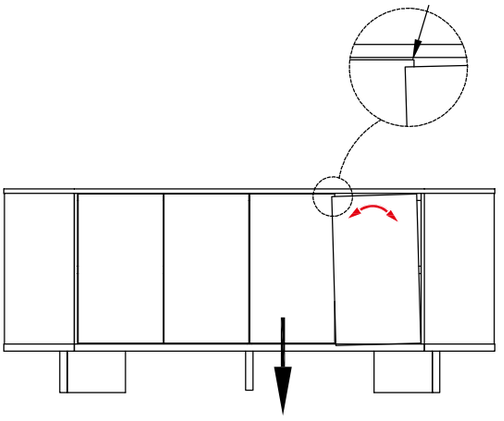

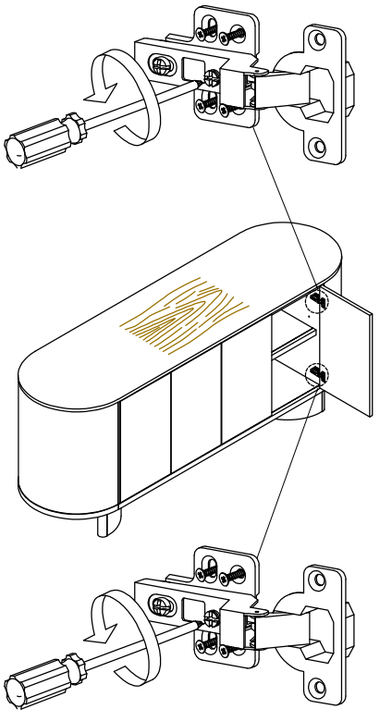

Turn right middle bolt adjuster properly until door is balanced

Question 2

How to adjust the two door are not aligned and higher with screw adjustment?

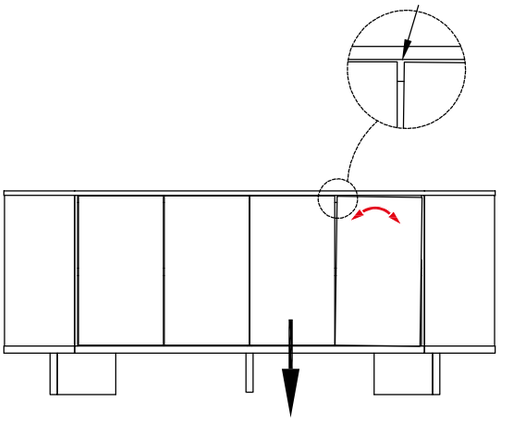

Turn right middle bolt adjuster properly until door is balanced

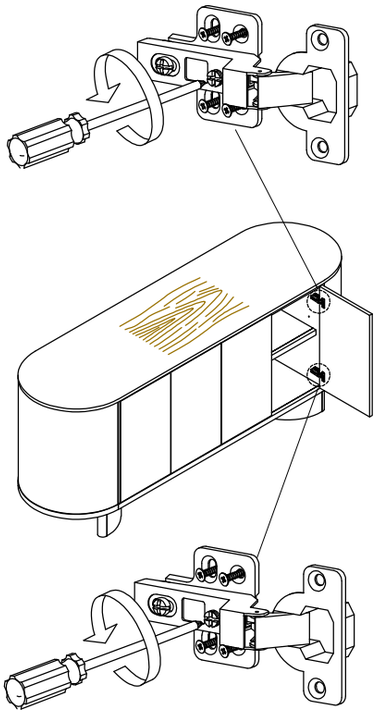

Turn left middle bolt adjuster properly until door is balanced

ASSEMBLY INSTRUCTIONS

SKU - 576 Sideboard

Hinges Adjustment Facilities

Warning : To ensure all hinges continue to work smoothly, pls check them regularly and adjust them necessory.

Question 3

How to adjust the door gap at side with screw adjustment?

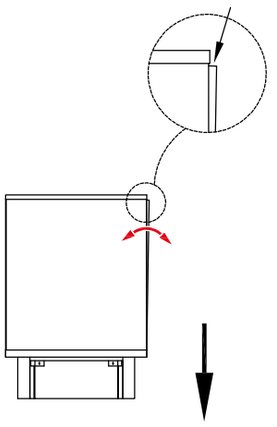

Turn left the adjuster properly until door is balanced

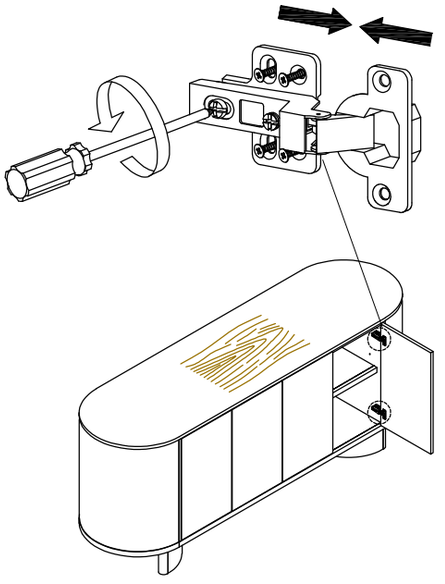

Question 4

How to adjust the door gap at at front with screw adjustment?

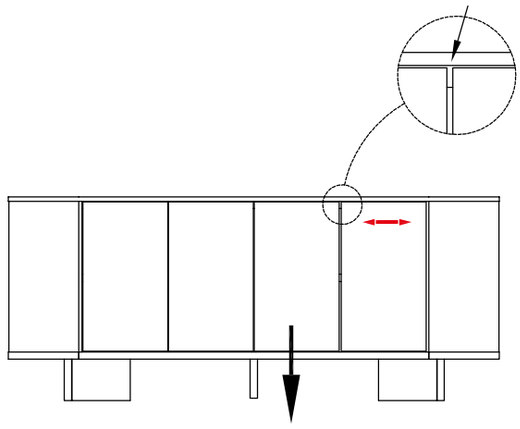

Turn right middle bolt adjuster properly until door is balanced

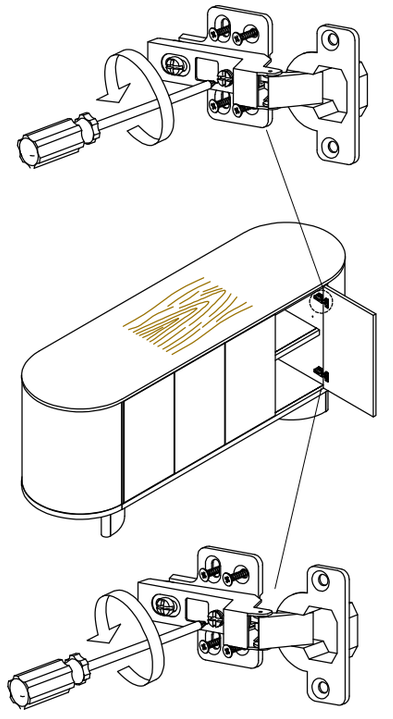

Turn right middle bolt adjuster properly until door is balanced