ASSEMBLY INSTRUCTIONS

meridian furniture

SKU/ITEM#:547/551/898 STOOL

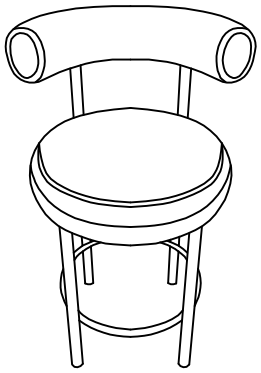

+ Do Not Use PowerTools



+ Suggested Adults



NOTE: For questions about parts or assembly please email support@meridianfurnitureusa.com or call us at 718-758-4455.

1 Read instructions cover to cover.

2 Save all packaging until assembly is completed.

1 IMPORTANT SAFETY INFORMATION

Do not assemble the product if any of the following parts arrived damaged:

Part ① Chair back
Part ② Cushion
Part ③ Upper leg frame
Part ④ Lower leg frame
Part ⑤ Foot rest

Do not assemble if any of the following Hardware parts are missing:

Part A Bolt 1/4"*1-3/4"
Part B Bolt 1/4"*1"
Part C Spring washer 1/4"
Part D Flat washer 1/4"
Part E Allen wrench 1/4"

2 IMPORTANT ASSEMBLY INFORMATION

Assembly Step If loosening persists, Please make sure to tighten all the bolts periodically, or use a thread locker adhesive.

+ Parts Included

① Chair back
1PC



② Cushion
1PC



③ Upper leg frame
1PC

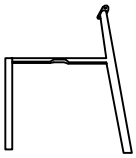

④ Lower leg frame
1PC



⑤ Foot rest
1PC



+ Hardware Included

A Bolt 1/4"*1-3/4"
5PCS



B Bolt 1/4"*1"
8PCS



C Spring washer 1/4"
9PCS



D Flat washer 1/4"
9PCS



E Allen wrench 1/4"
1PC



ASSEMBLY INSTRUCTIONS

meridian furniture

SKU/ITEM#:547/551/898 STOOL

1

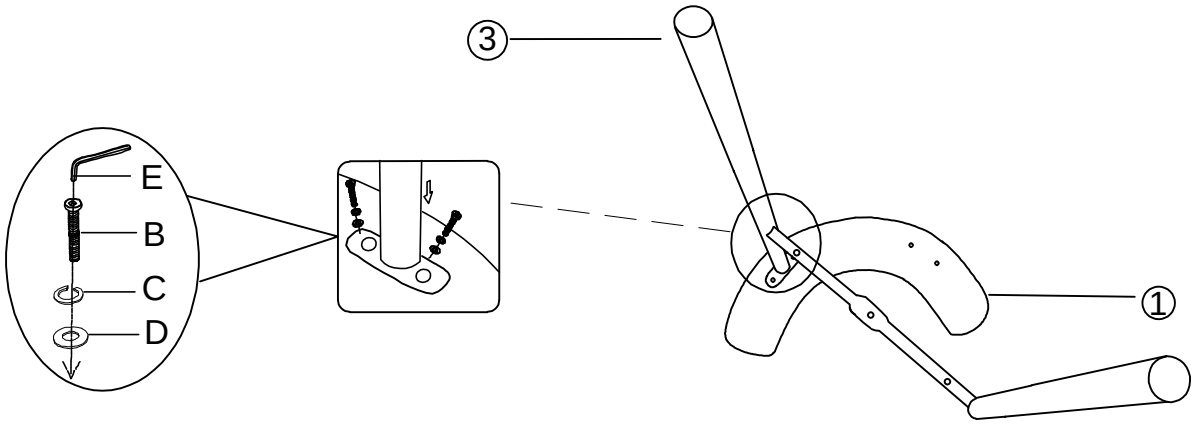

Note: At this stage, do not fully tighten the bolts.

2

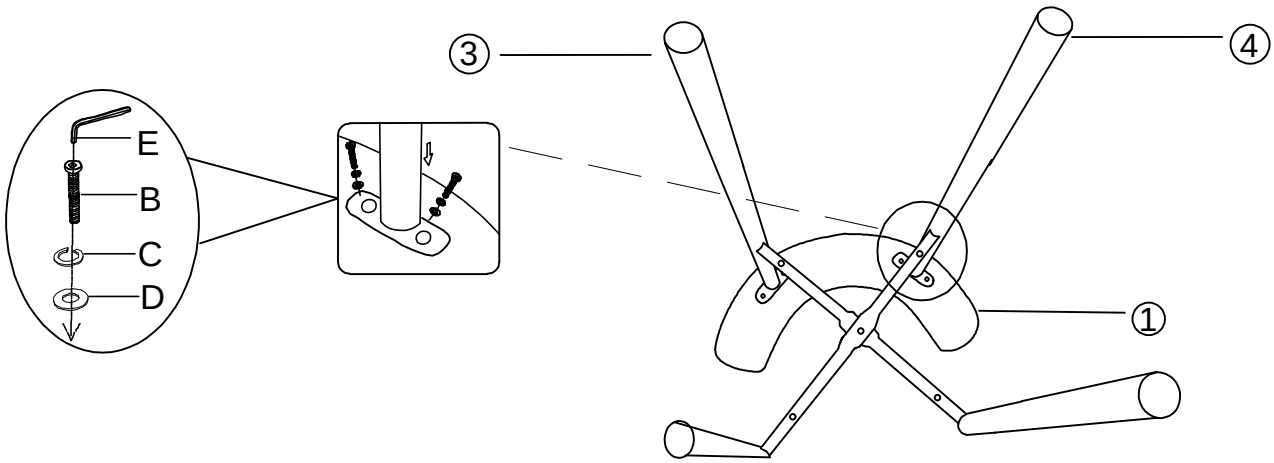

Note: At this stage, do not fully tighten the bolts.

3

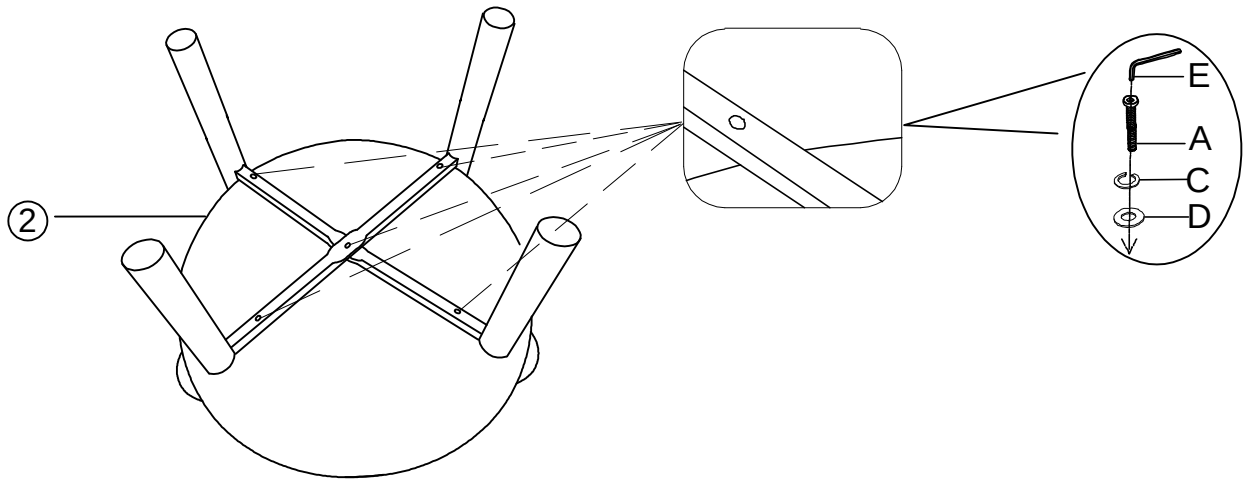

Note: At this stage, do not fully tighten the bolts.

NOTE: For questions about parts or assembly please email support@meridianfurnitureusa.com or call us at 718-758-4455.

www.MeridianFurnitureUSA.com | support@meridianfurnitureusa.com

ASSEMBLY INSTRUCTIONS

meridian furniture

SKU/ITEM#:547/551/898 STOOL

4

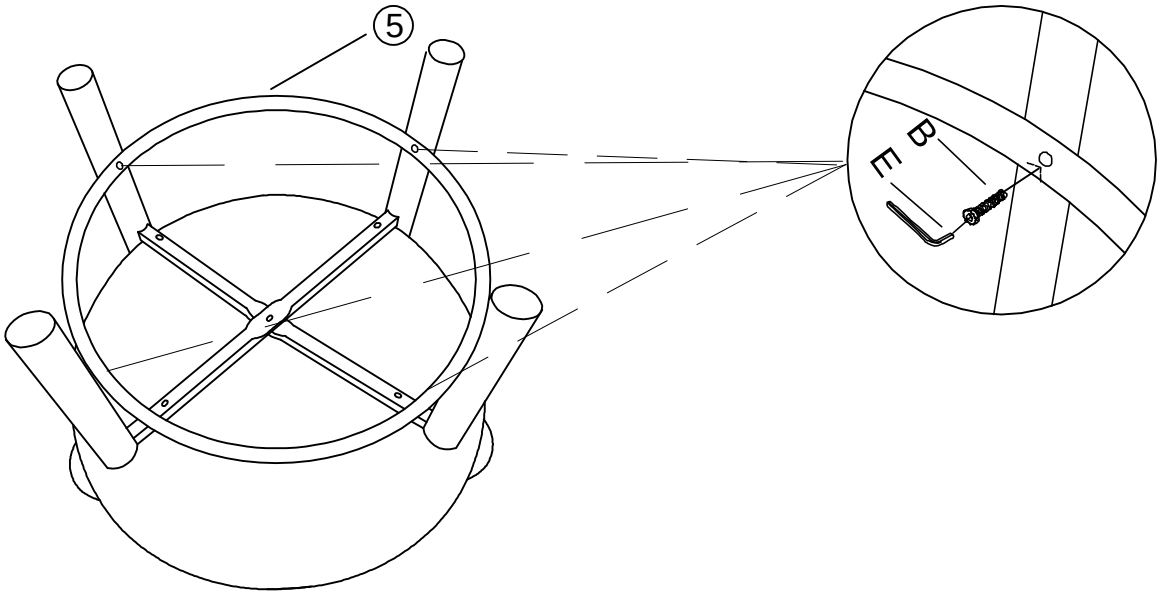

Note: At this stage, fully tighten the bolts.

5

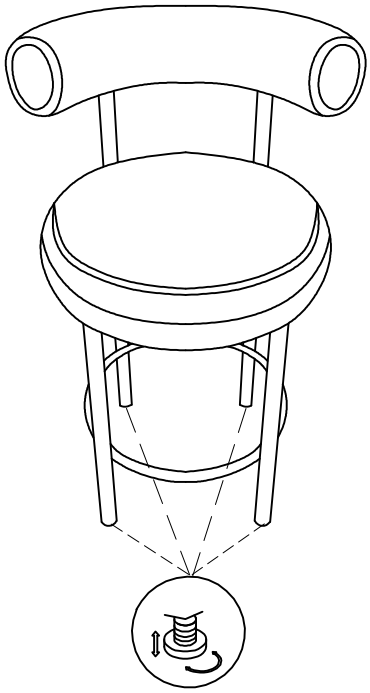

Adjust pre-installed levelers height to achieve balance.

NOTE: For questions about parts or assembly please email support@meridianfurnitureusa.com or call us at 718-758-4455.

www.MeridianFurnitureUSA.com | support@meridianfurnitureusa.com