ASSEMBLY INSTRUCTIONS

SKU/ITEM#517/518-DINING TABLE

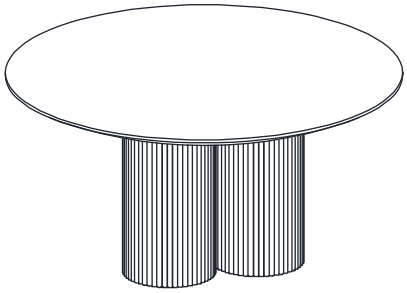

+ Do Not Use Power Tools



+ Suggested Adults



NOTE: For questions about parts or assembly please email support@meridianfurnitureusa.com or call us at 718-758-4455.

1 Read instructions cover to cover.

2 Save all packaging until assembly is completed.

+ Parts Included

① Table top (1/pc)

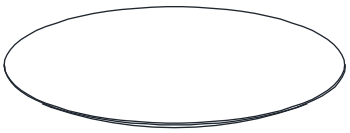

② Base (3/pcs)

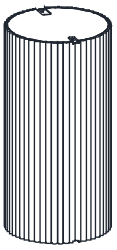

1 IMPORTANT SAFETY INFORMATION

Do not assemble the product if any of the following parts arrived damaged:

PART# ①-Table Top
PART# ②-Base

2 IMPORTANT ASSEMBLY INFORMATION

Assembly Step 1: Use wrench C to drive B fitted with iron plate A to connect part ② in top
Assembly Step 2: Use wrench C to drive B fitted with iron plate A to connect part ② in bottom
Assembly Step 3: Use wrench C to drive B fitted to fasten ② to ①

***Warning:** Do not over tighten screws, or it could damage the Table Top.

+ Hardware Included

A Iron plate (9/pcs)



B boltsM6X19 (18/pcs)



C 4# wrench (1/pc)



ASSEMBLY INSTRUCTIONS

SKU/ITEM#517/518-DINING TABLE

meridian furniture

1

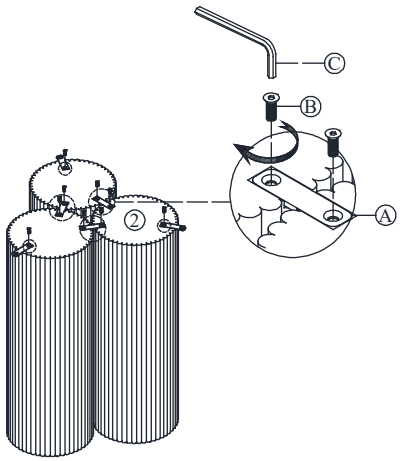

2

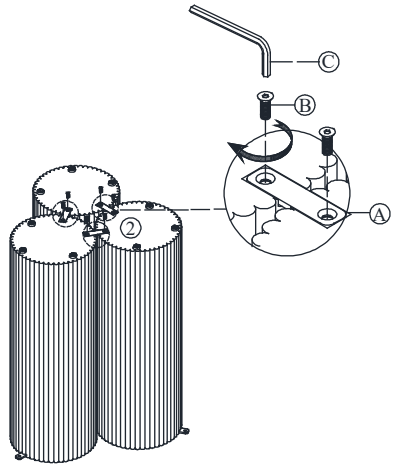

Note: Do not over tighten screws

3

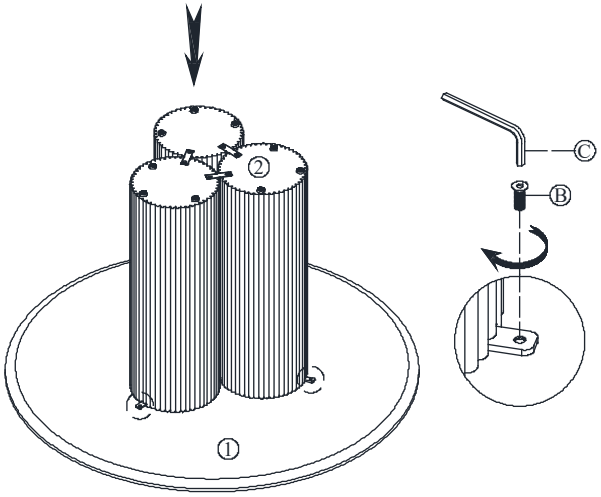

Note: Do not over tighten screws

4

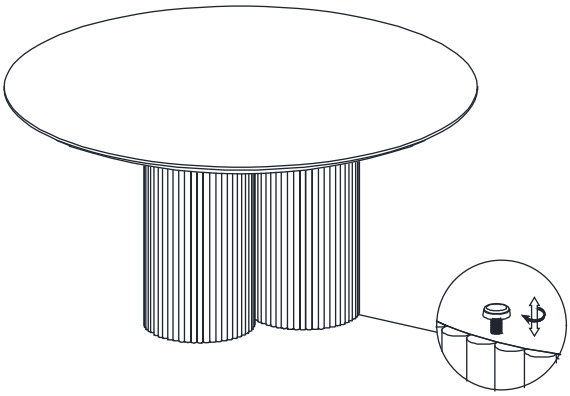

The assembly of the table is complete

NOTE: For questions about parts or assembly please email support@meridianfurnitureusa.com or call us at 718-758-4455.