ASSEMBLY INSTRUCTIONS
SKU / ITEM#- 502 Dining Table

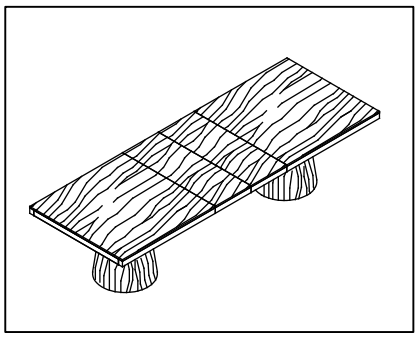

+ Do Not Use power Tools

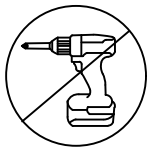

+ Suggested Adults



Note: For questions about pares or assembly please email support@ meridianfurnitureusa.com or call us at 718- 758- 4455

1 Read instructions cover to cover.

2 Save all packaging until assembly is completed.

1 IMPORTANT SAFETY INFORMATION

Do not assemble the product if any of the following parts arrived damaged:

Part# - Table Top

Part# - Table Leaf

Part# - Connection panel

Part# - Base

2 IMPORTANT ASSEMBLY INFORMATION

Assembly step Use Bolt B to connect Part 4 to Part 3, use Bolt B to connect Part 3 to Part 1

*Warning: Do not over tighten screws,or it could damage the Table Top.

+ Parts Included

① 1PC

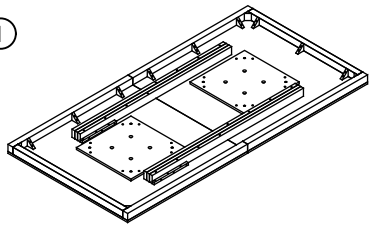

② 2PCS

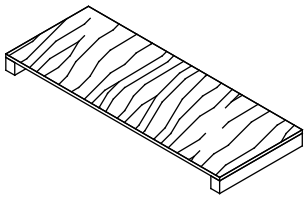

③ 2PCS

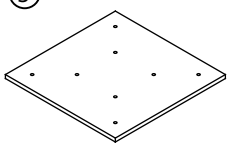

④ 2PCS

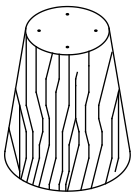

+ Hardware Included

A



Allen wrench (5MM) (1PC)

B

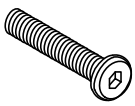

Bolt (5/16*1 3/8″) (16PCS)

C



Washer (16PCS)

D



Flat Washer (16PCS)

ASSEMBLY INSTRUCTIONS
SKU/ ITEM#- 502 Dining Table

1

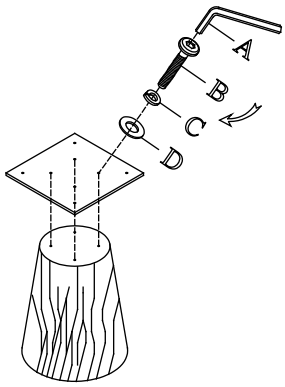

Note: Do not over tighten screws

2

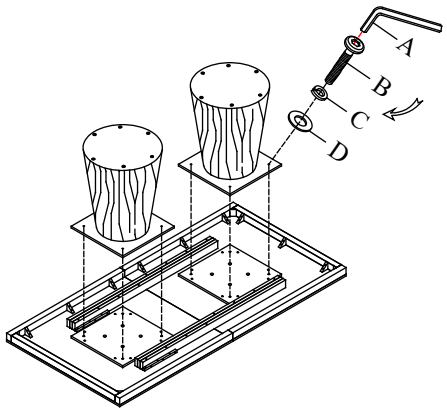

3

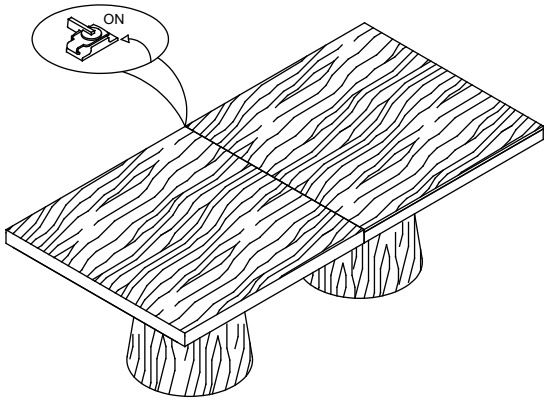

4

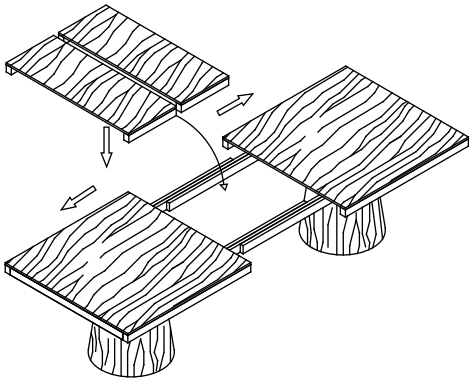

5

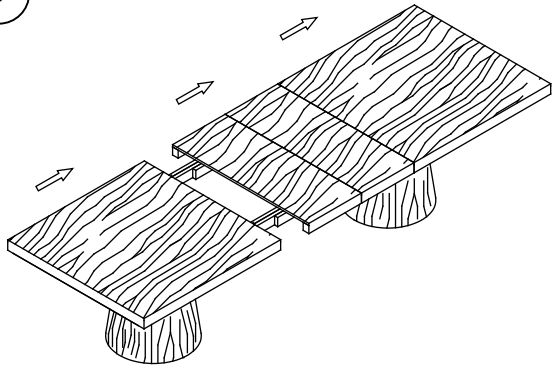

6

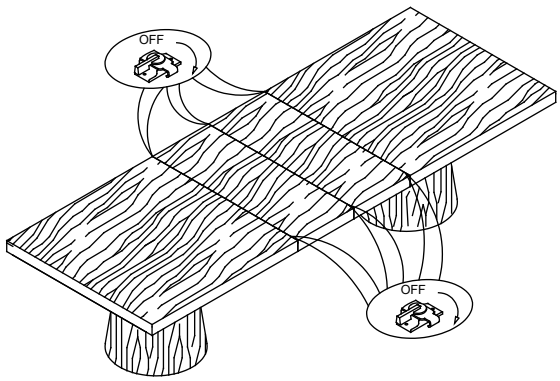

NOTE: For questions about pares or assembly please email support@ meridianfurnitureusa.com or call us at 718- 758- 4455