ASSEMBLY INSTRUCTIONS
443 - BENCH

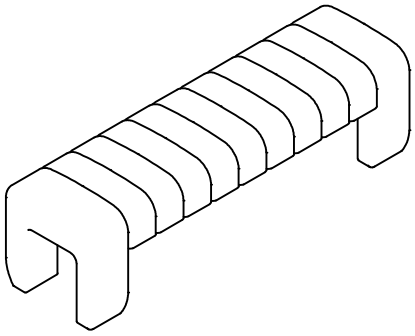

+ Do Not Use Power Tools



+ Suggested Adults



NOTE: For questions about parts or assembly please email support@meridianfurnitureusa.com or call us at 718-758-4455

1 Read instructions cover to cover.

2 Save all packaging until assembly completed.

+ Parts included

① Seat
(1 of pc)

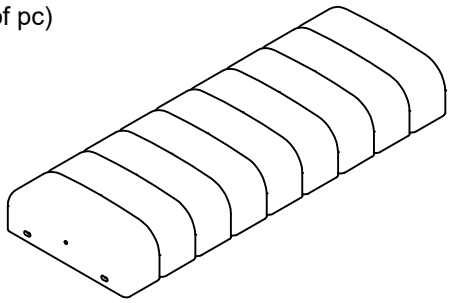

② Legs
(2 of pcs)

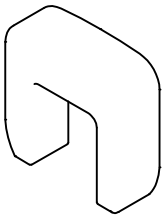

1 IMPORTANT SAFETY INFORMATION

Do not assemble the product if any of the following parts arrived damaged:

Part 1 - Seat
Part 2 - Legs

Do not assemble if any of the following Hardwave parts are missing:

Part A - Allen Key
Part B - Bolt
Part D - Flat Washer

2 IMPORTANT ASSEMBLY INFORMATION

Assembly Step If loosening persist, please make sure to tighten all the bolts periodically, or use a thread locker adhesive.

+ Hardwave Included

A Allen Key 4mm
(1 of pc)

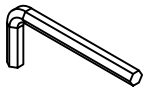

B Hex-head Bolt
Ø5/16" x 50mm
(6 of pcs)



C Spring Washer
Ø5/16"
(6 of pcs)



D Flat Washer
Ø5/16"
(6 of pcs)



ASSEMBLY INSTRUCTIONS

443/BENCH/1540*460*450

meridian furniture

1

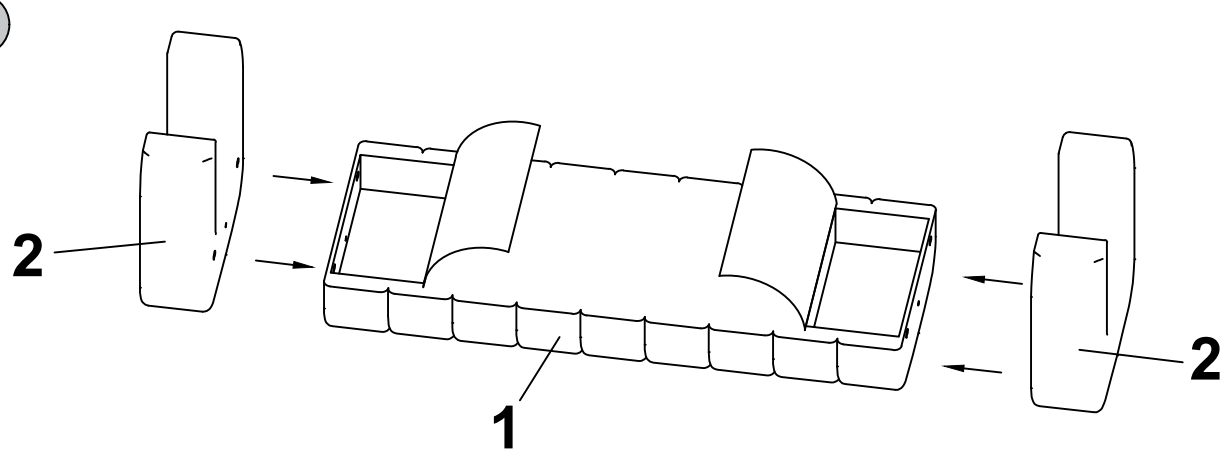

2

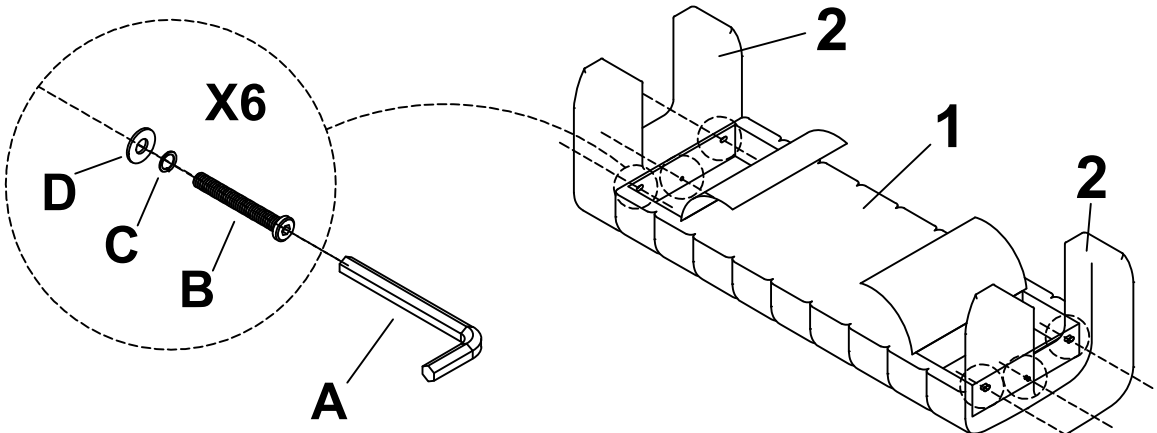

3

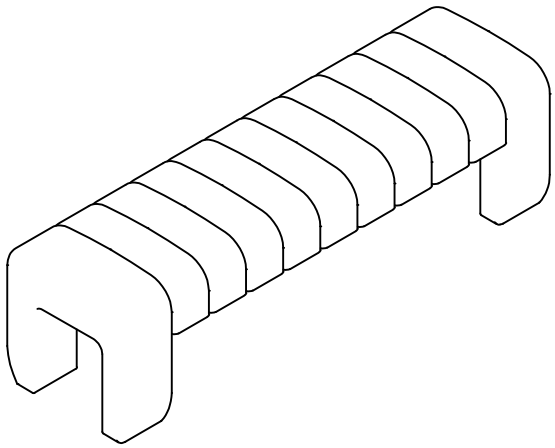

NOTE: For questions about parts or assembly please email support@meridianfurnitureusa.com or call us at 718-758-4455.