ASSEMBLY INSTRUCTIONS
ITEM NO:412T

meridian furniture

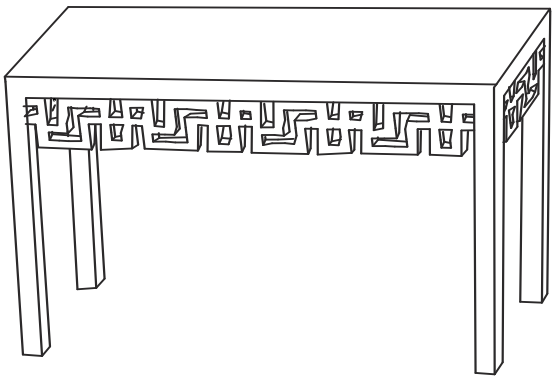

+ Do Not Use Power Tools

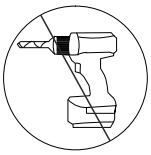

+ Suggested Adults

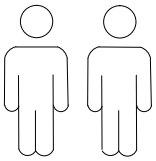

NOTE: For questions about parts or assembly please email support@meridianfurnitureusa.com or call us at 718-758-4455.

1 Read instructions cover to cover.

2 Save all packaging until assembly is completed.

+ Parts Included

① Desktop (1pcs)

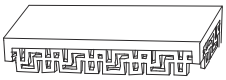

② Leg (4pcs)



1 IMPORTANT SAFETY INFORMATION

Do not assemble the product if any of the following parts arrived damaged:

Part #① Desktop(1pcs)

② Leg(4pcs)

2 IMPORTANT ASSEMBLY INFORMATION

Do not tighten until all hardware is locked

+ Hardware Included



A Allen Key (1pc)



B Bolt (8pcs)



C Spring Gaskets (8pcs)



D Flst washer （8pcs）

ASSEMBLY INSTRUCTIONS
ITEM NO:412T

meridian furniture

1

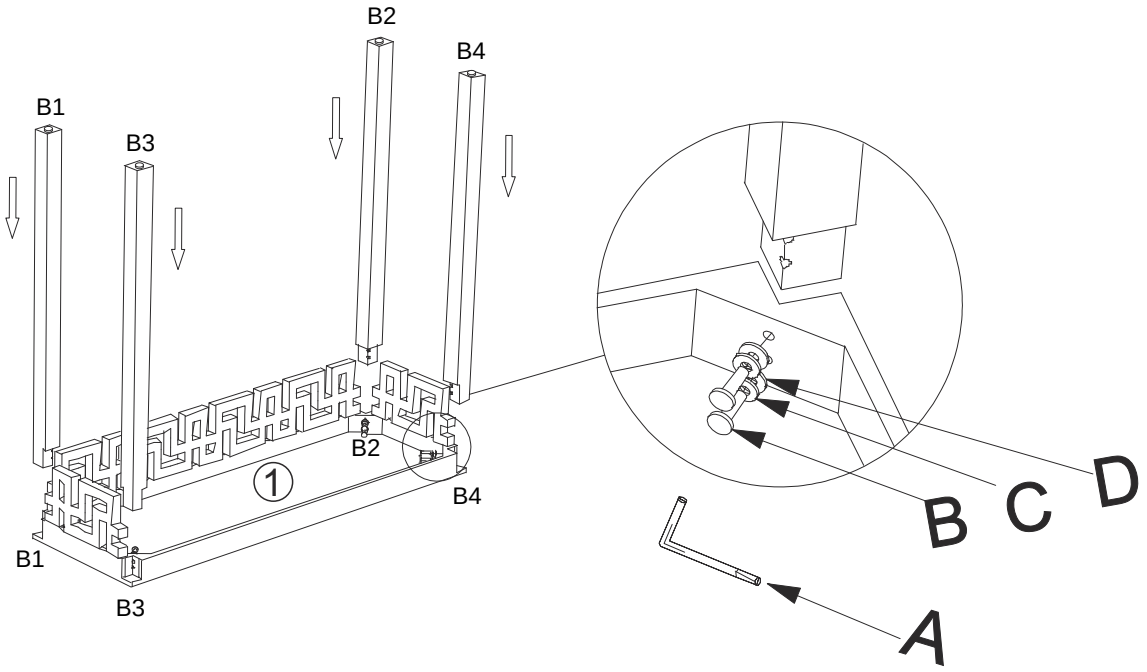

2

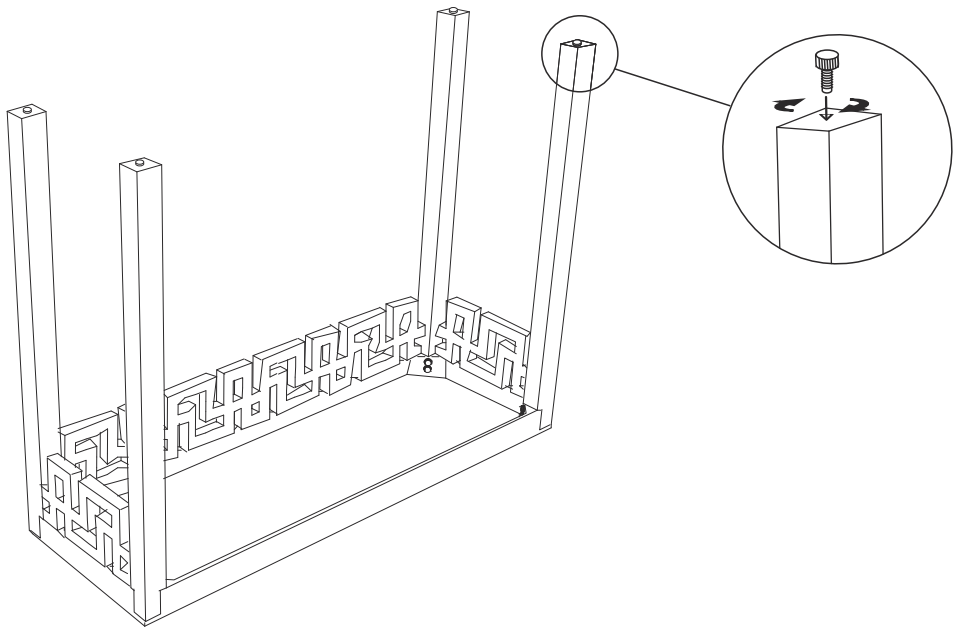

NOTE: For questions about parts or assembly please email support@meridianfurnitureusa.com or call us at 718-758-4455.