ASSEMBLY INSTRUCTIONS

SKU/ITEM# -396

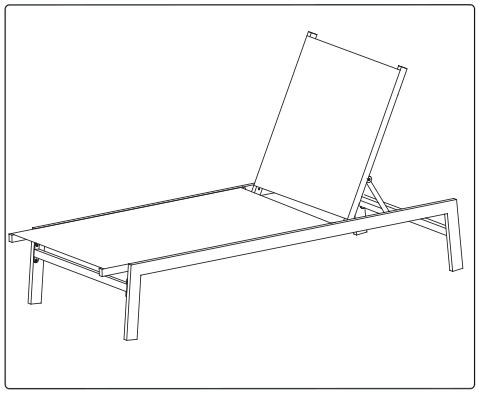

+ Do Not Use Power Tools



+ Suggested Adults

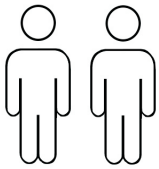

NOTE: For questions about parts or assembly please email support@meridianfurnitureusa.com or call us at 718-758-4455.

1 Read instructions cover to cover.

2 Save all packaging until assembly is completed.

+ Parts Included

① (1pc)



② (1pc)



③ (1pc)

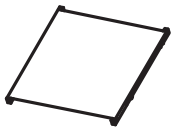

④ (1pc)

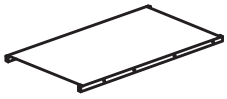

⑤ (2pcs)



1 IMPORTANT SAFETY INFORMATION

Do not assemble the product if any of the following parts arrived damaged:
Part#-leg (long)①②
Part#- Seat ③④Part#- crossbar ⑤

Do not assemble if any of the following hardwareparts are missing:
Part#-BoltPart#-Allen key

2 IMPORTANT ASSEMBLY INFORMATION

Assembly Step If loosening persists, pleasemake sure to tighten all the bolts periodically, or usea thread locker adhesive.

+ Hardware Included

A



Allen Key
(1pc)

B



M6*18

Bolt
(10pcs)

C



M6*45

Bolt
(8pcs)

ASSEMBLY INSTRUCTIONS

SKU/ITEM# - 396

meridian. furniture

1

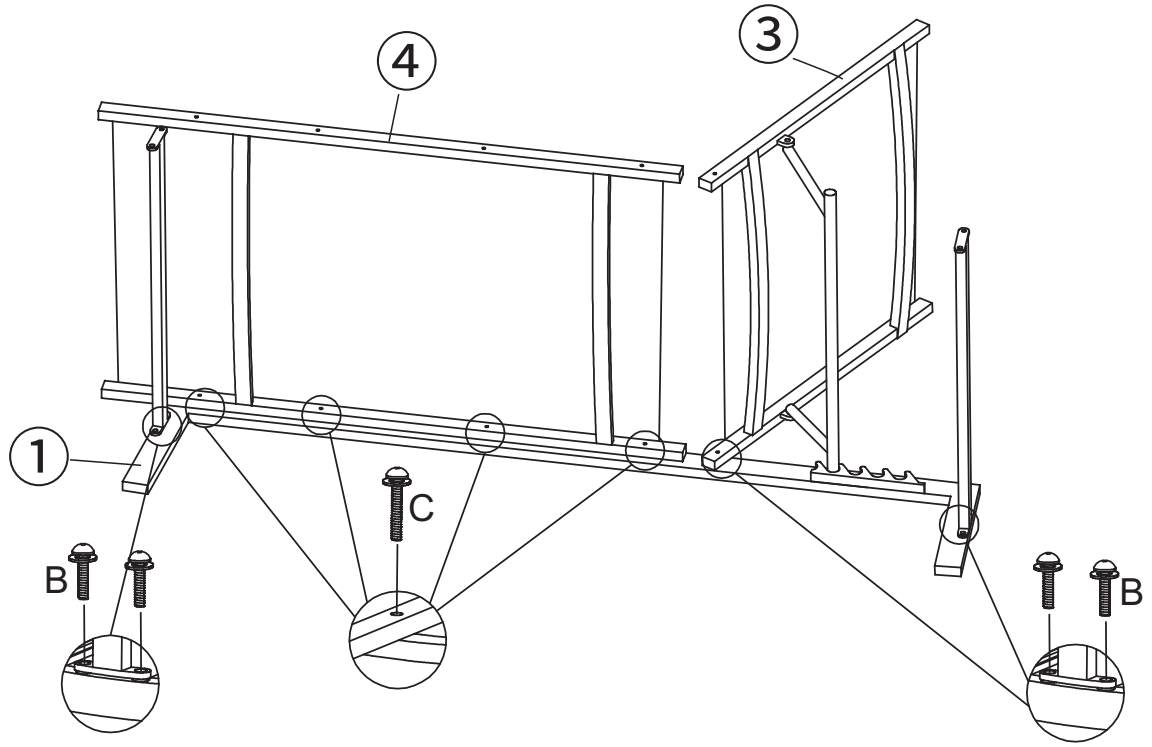

2

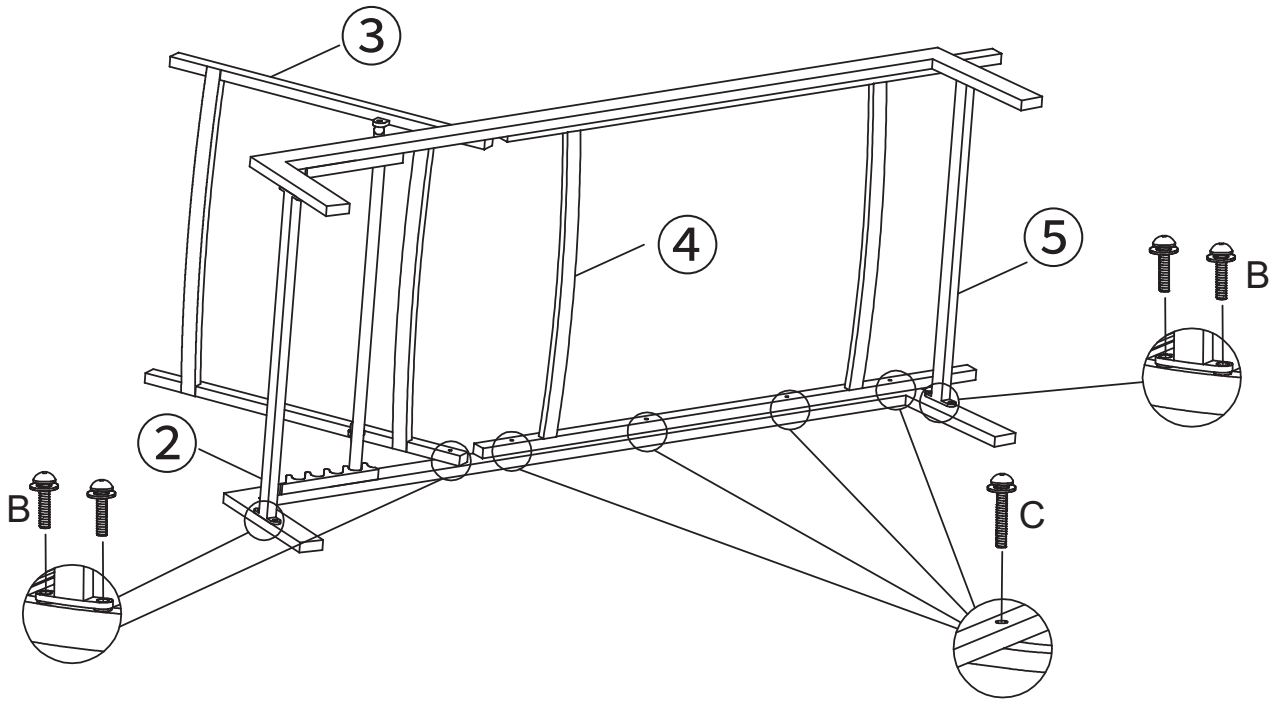

NOTE: For questions about parts or assembly please email support@meridianfurnitureusa.com or call us at 718-758-4455.