ASSEMBLY INSTRUCTIONS

meridian furniture

SKU / ITEM #355,356,357,358,359 Sideboard

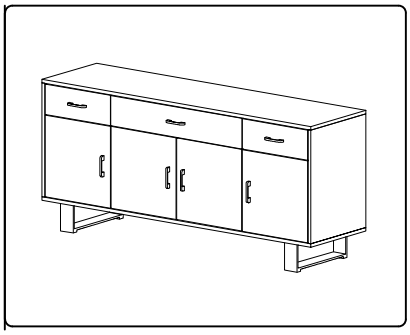

+ Do Not Use Power Tools



+ Suggested Adults

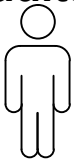

NOTE: For questions about parts or assembly please email support@meridianfurnitureusa.com or call us at 718-758-4455.

1 Read instructions cover.
2 Save all packaging until assembly is completed.

+ Parts Included

① Table Top (1pc)

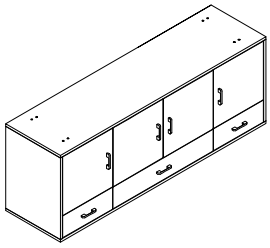

② Table Base (2pcs)

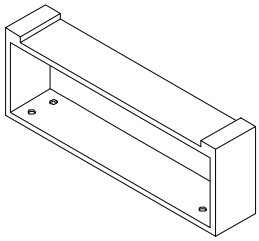

③ Table Leg (1pc)



1 IMPORTANT SAFETY INFORMATION

Do not assemble the product if any of the following parts arrived damaged:

Part # - Table Top (1pc)
Part # - Table Base (2pcs)
Part # - Table Leg (1pc)

2 IMPORTANT ASSEMBLY INFORMATION

Assembly Step 1: Use ABCD to connect ② to ①

Assembly Step 2 : Use ③ to connect to ①

***Warning**: Do not over tighten screws, or it could damage the Table Top.

+ Hardware Included

A Allen Bolt — M8*35mm 8 pcs



B Spring Washer — φ8 8 pcs



C Flat Washer — φ8 8 pcs



D Allen Wrench — M6 1pc



ASSEMBLY INSTRUCTIONS

meridian furniture

SKU / ITEM # 355,356,357,358,359 Sideboard

1

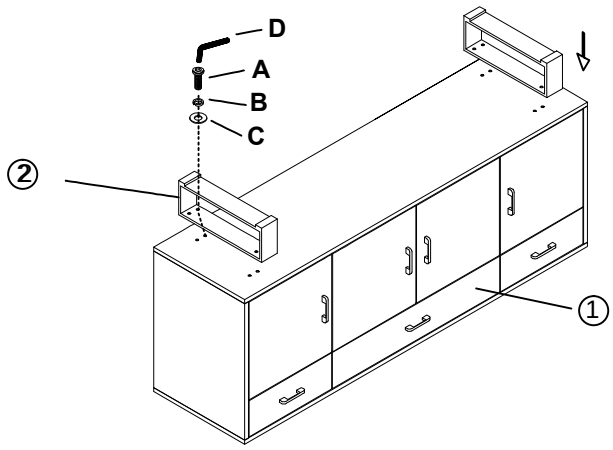

Note: Do not over tighten screws

2

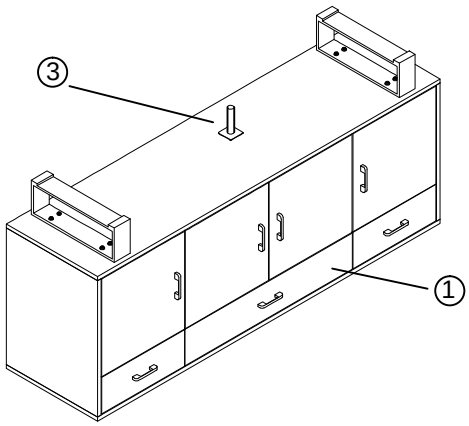

Note: Do not over tighten screws

3

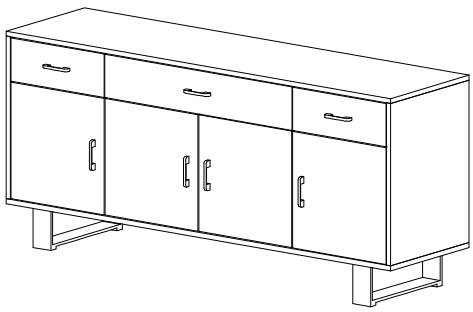

NOTE: For questions about parts or assembly please email support@meridianfurnitureusa.com or call us at 718-758-4455