ASSEMBLY INSTRUCTIONS

SKU - 302 Console Table

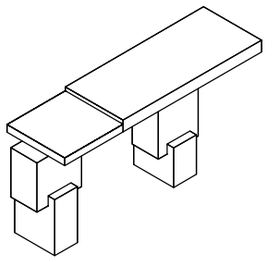

+ Do Not Use power Tools



+ Suggested Adults



Note: For questions about pares or assembly please email support@meridianfurnitureusa.com or call us at 717-758-4455

1 Read ins tructions cover to cover.

2 Save a ll packaging until as s embly is completed.

1 IMPORTANT SAFETY INFORMATION

Do not assemble the product if any of the following parts arrived damaged:

Part# -Console Table
Part# -Base (A)
Part# -Connetion panel (A)
Part# -Base (B)
Part# -Connetion panel (B)

2 IMPORTANT ASSEMBLY INFORMATION

Assembly step Use Bolt B to connect Part 3 to Part 2, use Bolt B to connect Part 5 to Part 4,use Bolt B to connect Part 3 to Part 1,use Bolt B to connect Part 5 to Part 1

*Warning: Do not over tighten screws,or it could damage the Console Table

+ Parts Included

①

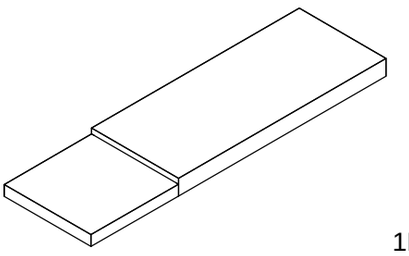

1PC

②

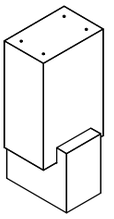

1 PC

③

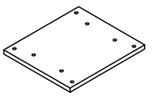

1 PC

④

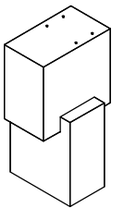

1 PC

⑤

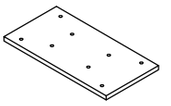

1 PC

+ Hardware Included

A



Allen Wrench (4MM) (1PC)

B

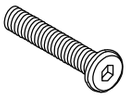

Bolt (5/16 * 1-3/8") (16PCS)

C



Washer (5/16) (16PCS)

D



Flat Washer (5/16 * 3/4") (16PCS)

ASSEMBLY INSTRUCTIONS

SKU - 302 Console Table

1

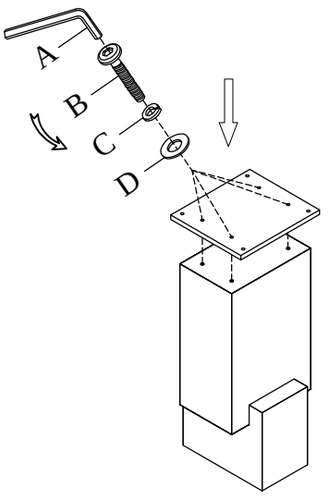

2

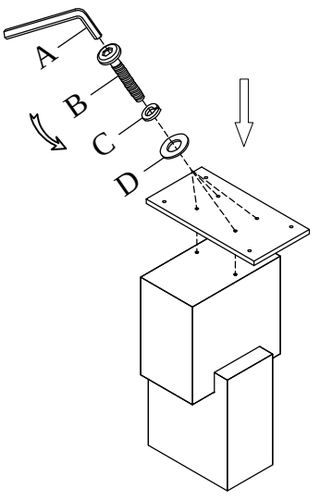

3

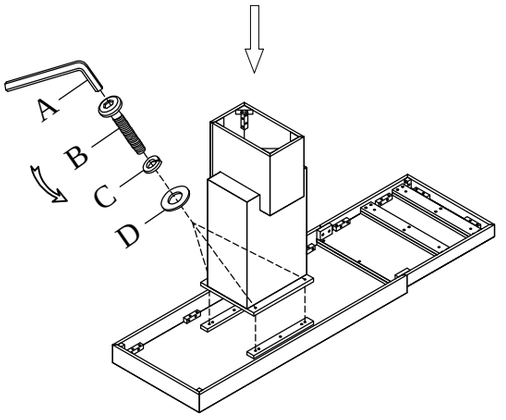

4

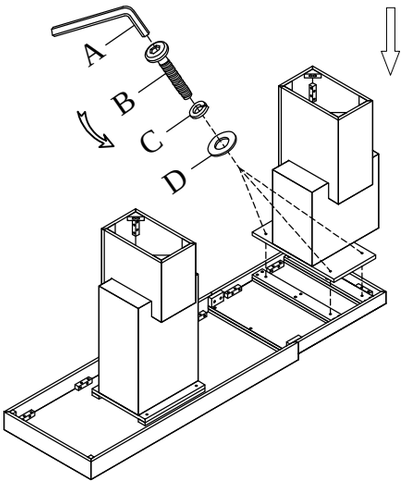

5

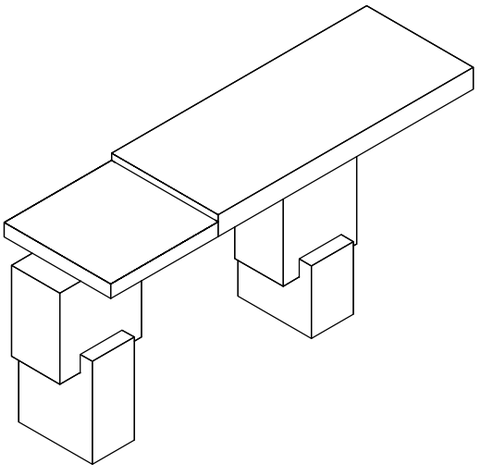

Note: For questions about pares or assembly please email support@meridianfurnitureusa.com or call us at 717-758-4455