ASSEMBLY INSTRUCTIONS
279-CT

meridian furniture

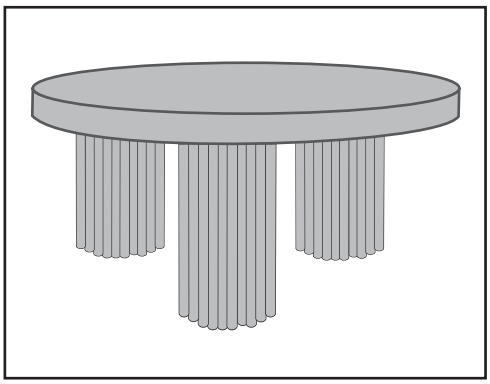

+ Parts Included

① TOP
(No. of pc 1)

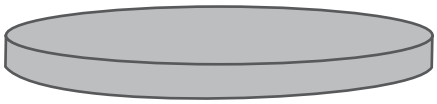

② Legs
(No. of pcs 3)

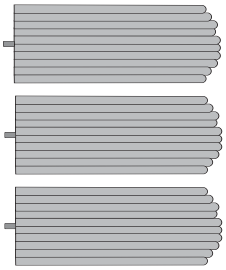

+ Do Not Use Power Tools



+ Suggested Adults

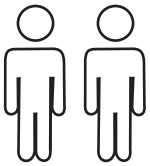

NOTE: For questions about parts or assembly please email support@meridianfurnitureusa.com or call us at 718-758-4455.

1 Read instructions cover to cover.
2 Save all packaging unit assembly is completed.

1 IMPORTANT SAFETY INFORMATION

Do not assemble the product if the following part arrives damaged:
Part # 1 Table Top, part # 2 Table Legs

CAUTION : DO NOT place hot objects (100° F or more) directly on the Surface.

2 IMPORTANT ASSEMBLY INFORMATION

Assembly Step : Turn Part # 2 Clockwise to to connect to part #1.

Assembly Step : Repeat Same Step to assemble remaining part #2.

+ Hardware Included

No Hardware Required for Assembly.

ASSEMBLY INSTRUCTIONS

279-CT

meridian furniture

1

Part#1 Table TOP

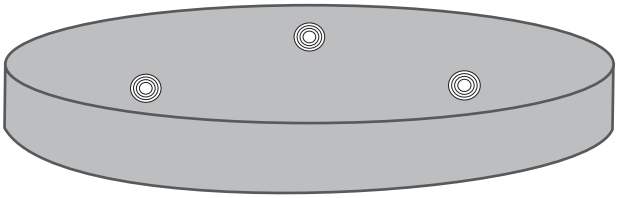

2

Part#2 Table Legs

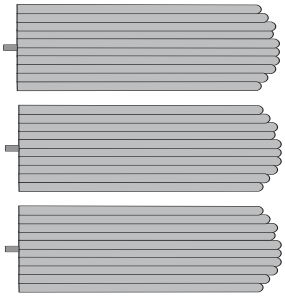

3

Tighten Leg Part#2 turning Clockwise

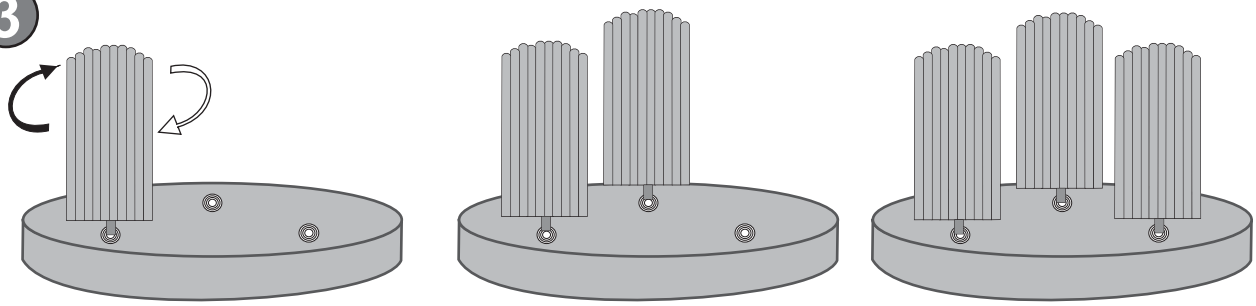

4

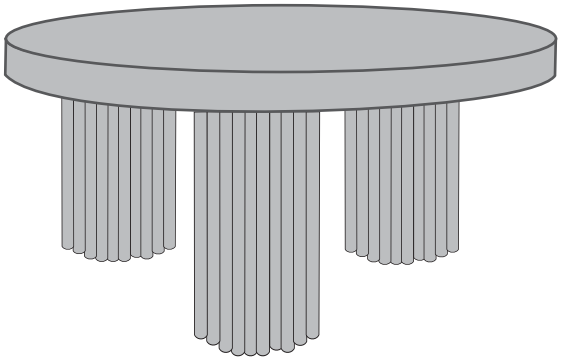

NOTE: For questions about parts or assembly please email support@meridianfurnitureusa.com or call us at 718-758-4455.