ASSEMBLY INSTRUCTIONS

269-C / 272-C

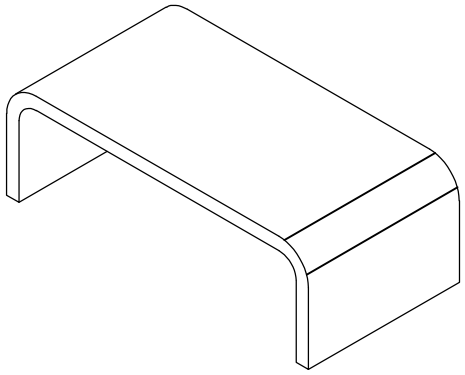

+Do Not Use Power Tools



+Suggested Adults

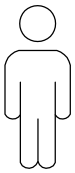

NOTE: For questions about parts or assembly please email support@meridianfurnitureusa.com or call us at 718-758-4455.

1 Read instructions cover to cover.
2 Save all packaging until assembly is completed.

1 IMPORTANT SAFETY INFORMATION

Do not assemble the product if the parts arrived damaged.

Do not assemble if Hardware parts are missing.

2 IMPORTANT ASSEMBLY INFORMATION

Assembly Step lf loosening persists, please make sure to tighten all the bolts periodically, or use a thread locker adhesive.

+Parts Included

① Coffee table and pallet panel (1 pc)

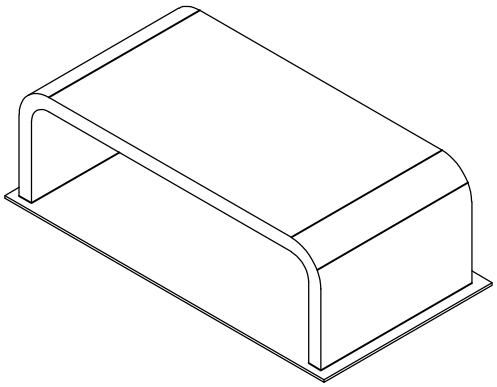

+Parts Included

A. Adjustable glide
Ø23xØ6x22mm (4 pcs)

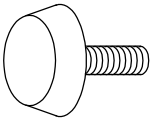

ASSEMBLY INSTRUCTIONS

269-C / 272-C

①

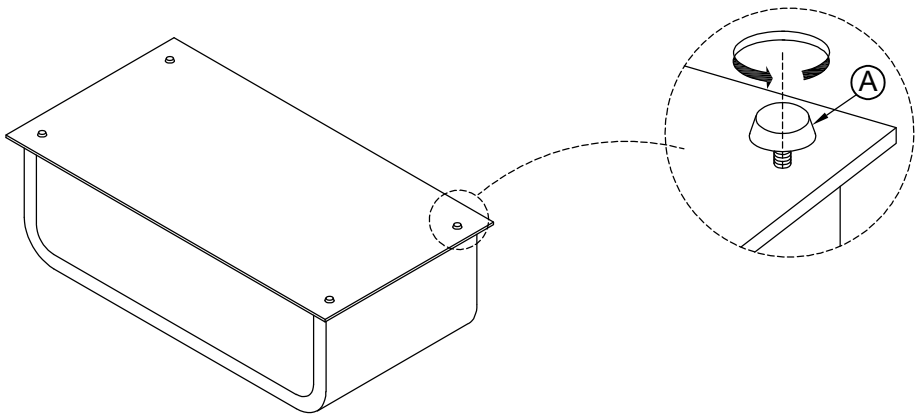

②

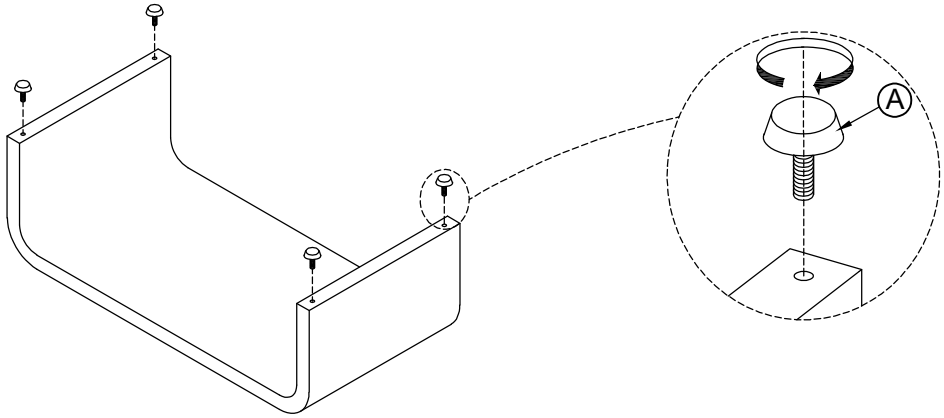

③

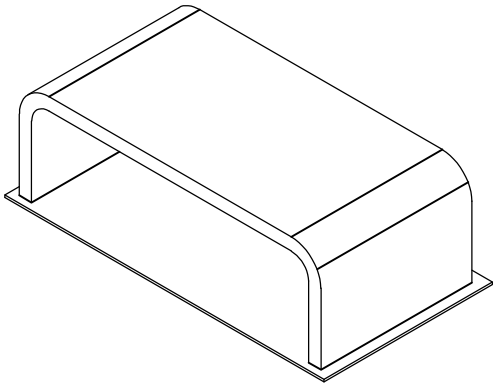

NOTE: For questions about parts or assembly please email
support@meridianfurnitureusa.com or call us at 718-758-4455.
www.MeridianFurnitureUSA.com | support@meridianfurnitureusa.com