ASSEMBLY INSTRUCTIONS

meridian furniture

SKU/ITEM # - 263-CT

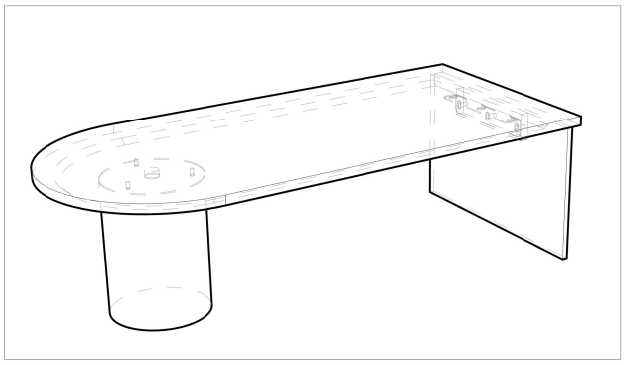

+ Do Not Use Power Tools



+ Suggested Adults

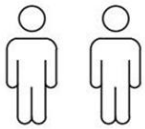

NOTE: For questions about parts or assembly please email support@meridianfurnitureusa.com or call us at 718-758-4455.

1. Read instructions cover to cover.
2 Save all packaging until assembly is completed.

1. IMPORTANT SAFETY INFORMATION

Do not assemble the product if any of the following parts arrived damaged :

Part # 1 - Marble top
Part # 2 - Rectangular Marble Base
Part # 3 - Cylindrical Marble Base

2. IMPORTANT ASSEMBLY INFORMATION

Assembly step :

Step - 1 Use Bolt A, B, C,D, E to connect Part 1 , Part 2 and Part 3.

Warning : Do not over tighten screws, or it could damage the Table Top.

+Parts Included

1. Marble Top
(1 pc)

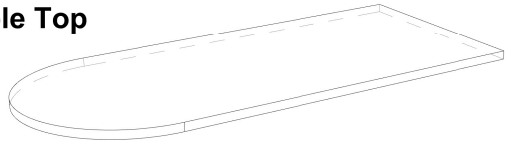

2. Rectangular Marble Base
(1 pc)

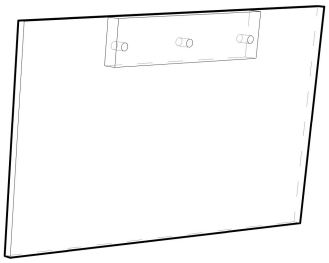

3. Cylindrical Marble Base
(1 pc)

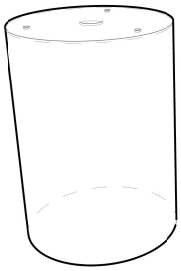

+ Hardware Included

A. Allen Screw 20 x 8
(10 pc)

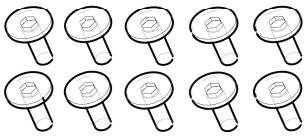

B. Washer 20 x 8
(10 pc)

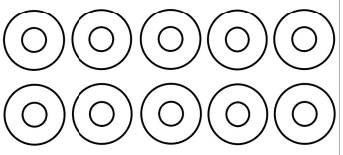

C. Metallic Plate
(1 pc)

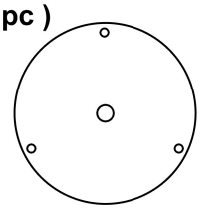

D. L Angle
(1 pc)

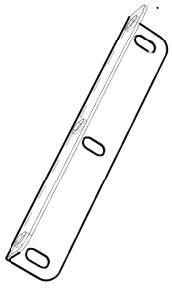

E. Allenkey 5mm
(1 pc)



ASSEMBLY INSTRUCTIONS

SKU/ITEM # - 263-CT

meridian
furniture

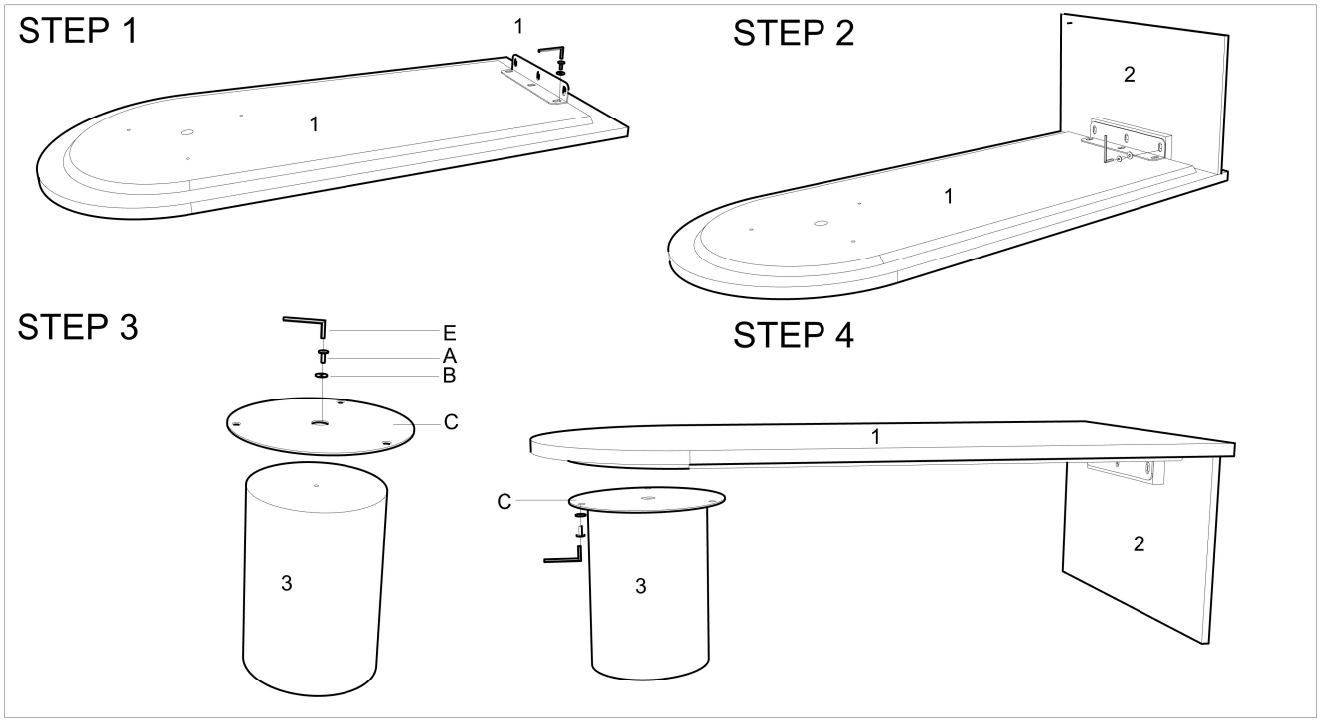

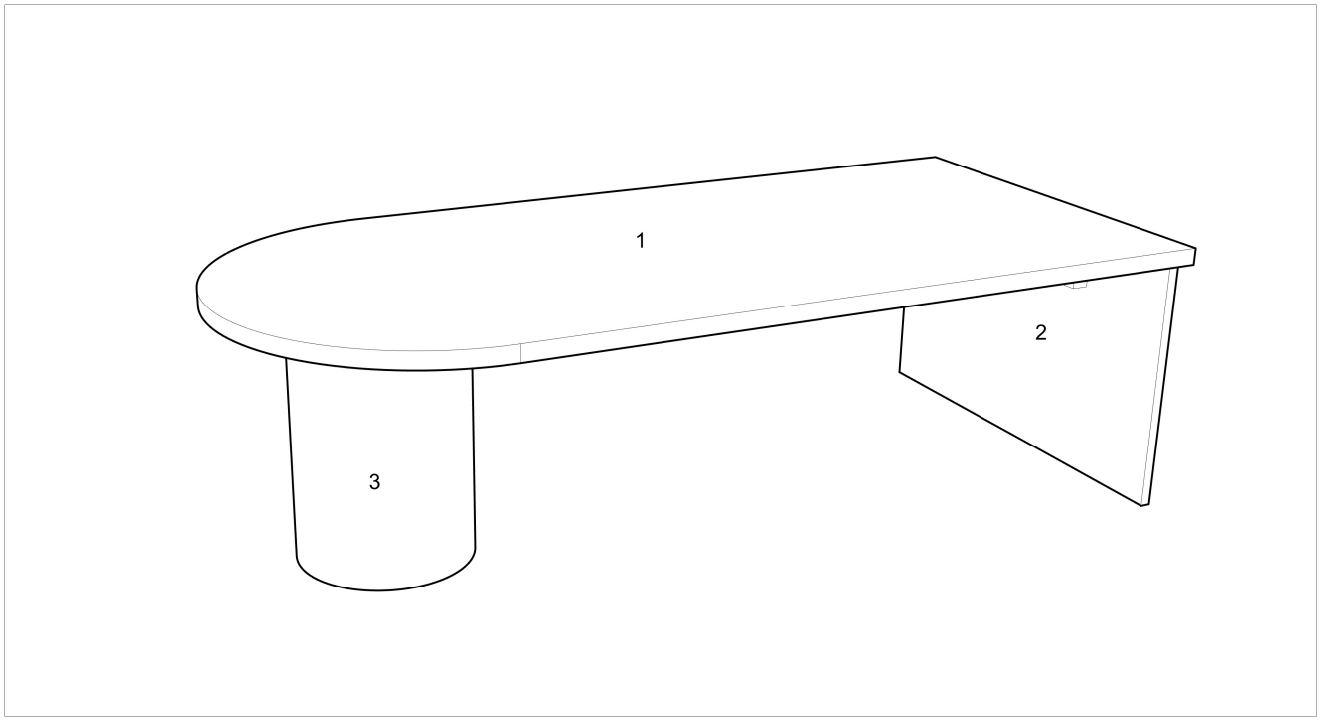

NOTE: For questions about parts or assembly please email support@meridianfurnitureusa.com or call us at 718-758-4455.