# ASSEMBLY INSTRUCTIONS

meridian furniture

SKU/ITEM # -248-DT

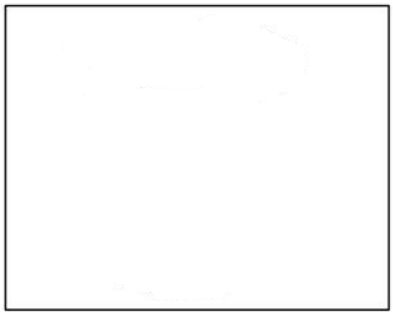

## + Do Not Use Power Tools



## + Suggested Adults

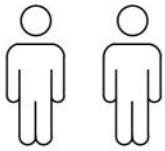

**NOTE:** For questions about parts or assembly please email support@meridianfurnitureusa.com or call us at 718-758-4455.

**1.** Read instructions cover to cover.
2 Save all packaging until assembly is completed.

## +Parts Included

(T) Marble Top
( 1 pc)

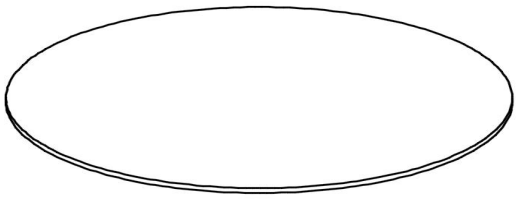

② marble base
(1 pc )

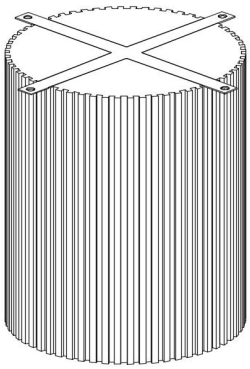

**1. IMPORTANT SAFETY INFORMATION**
**Do not** assemble the product if any of the following parts arrived damaged :

Part # 1 - Marble top
Part # 2 - Marble Base

**2. IMPORTANT ASSEMBLY INFORMATION**
**Assembly step :**

**Step - 1 Use bolt A, B, C to connect Part 1 and Part 2.**

**'Warning** : Do not over tighten screws, or it could damage the Table Top.

## + Hardware Included

**A . Allen Screw 8x20**
**( 4 pc)**



**B . Screw 25x8**
**(4 pc)**



**C. Allenkey 5mm**
**(1 pc)**



# ASSEMBLY INSTRUCTIONS

meridian, furniture

SKU/ITEM # - 248-DT48

1

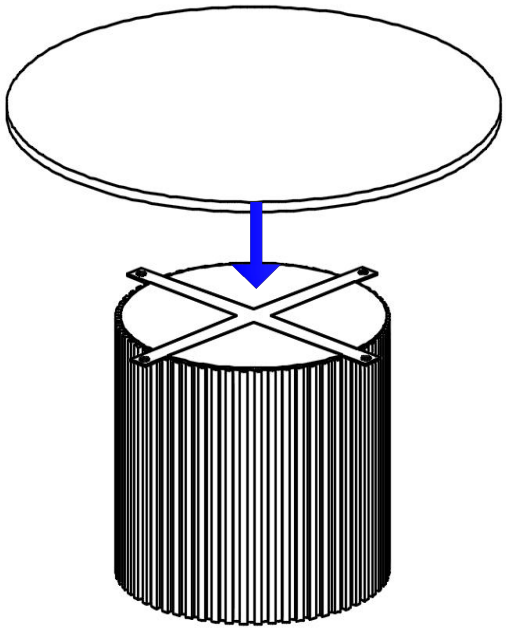

2

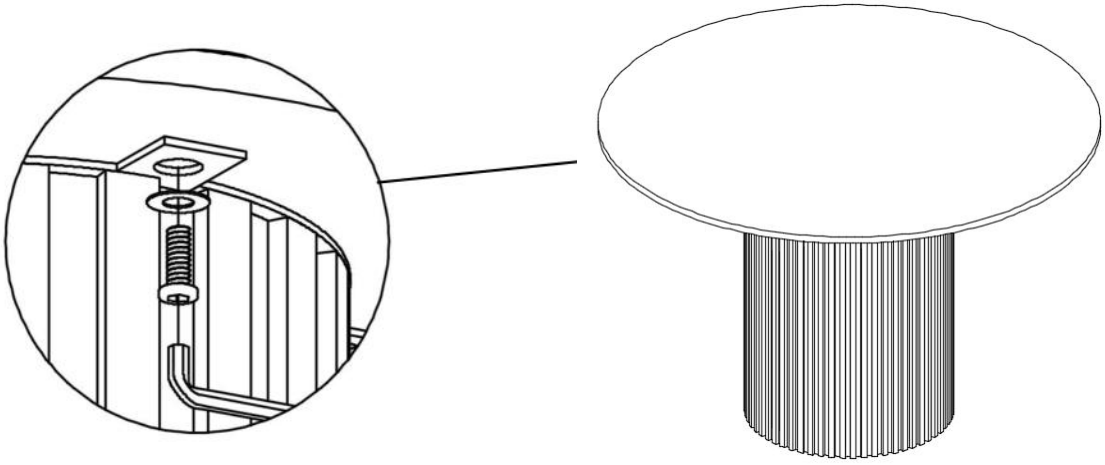

**Note:** Do not over tighten screws

NOTE: For questions about parts or assembly please email support@meridianfurnitureusa.com or call us at 718-758-4455.