ASSEMBLY INSTRUCTIONS

meridian furniture

SKU/ITEM # - 248-CT

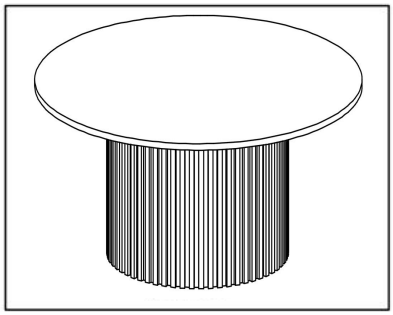

+ Do Not Use Power Tools



+ Suggested Adults

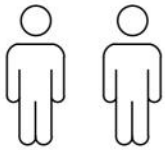

NOTE: For questions about parts or assembly please email support@meridianfurnitureusa.com or call us at 718-758-4455.

1. Read instructions cover to cover.
2 Save all packaging until assembly is completed.

+Parts Included

(T) Marble Top
(1 pc)

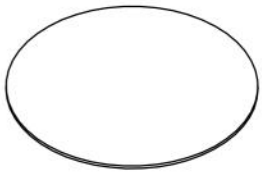

② marble base
(1 pc)

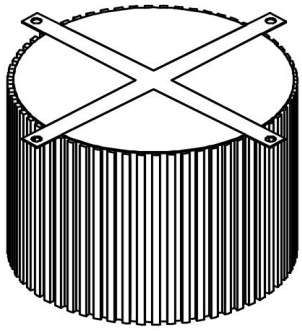

1. IMPORTANT SAFETY INFORMATION

Do not assemble the product if any of the following parts arrived damaged :

Part # 1 - Marble top
Part # 2 - Marble Base

2. IMPORTANT ASSEMBLY INFORMATION

Assembly step :

Step - 1 Use bolt A, B, C to connect Part 1 and Part 2.

'Warning : Do not over tighten screws, or it could damage the Table Top.

+ Hardware Included

A . Allen Screw 8x16
(4 pc)



B . Screw 20x8
(4 pc)



C. Allenkey 5mm
(1 pc)



ASSEMBLY INSTRUCTIONS

meridian, furniture

SKU/ITEM # - 248-CT

1

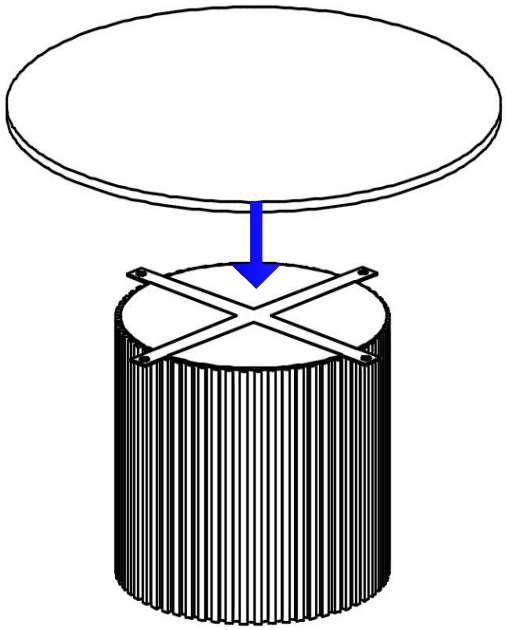

2

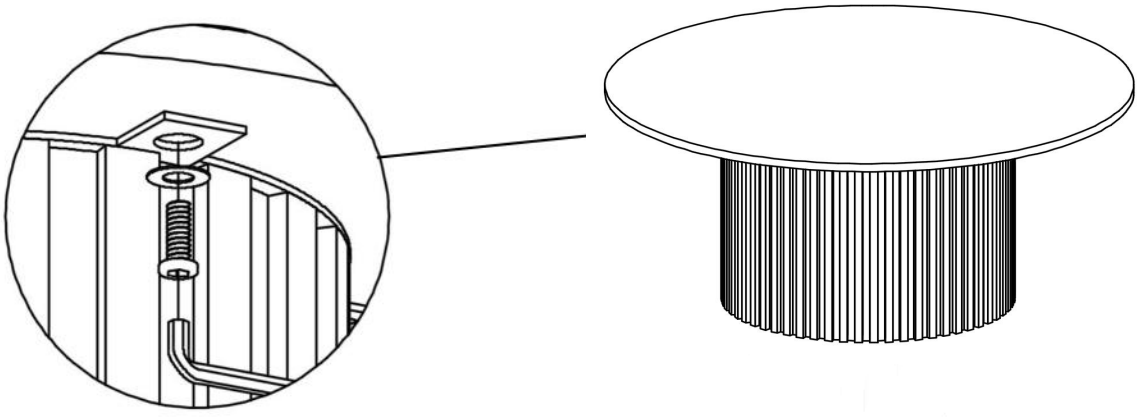

Note: Do not over tighten screws

NOTE: For questions about parts or assembly please email support@meridianfurnitureusa.com or call us at 718-758-4455.