ASSEMBLY INSTRUCTIONS

meridian. furniture

SKU/ITEM#-212/235-E

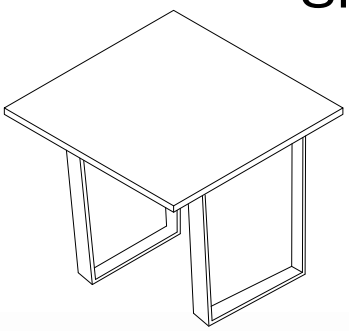

+ Do Not Use Power Tools



+ Suggested Adults



NOTE: For questions about parts or assembly please email support@meridianfurnitureusa.com or call us at 718-758-4455.

1 Read instructions cover to cover.

2 Save all packaging until assembly is completed.

1 IMPORTANT SAFETY INFORMATION

Do not assemble the product if any of the following parts arrived damaged:

Part # - Base

Part # - Table Top

Part # - Connection Panel

2 IMPORTANT ASSEMBLY INFORMATION

Assembly Step Use Bolt , to connect Part to Part .

Assembly Step Use Bolt , to connect Part , and part , to Part .

***Warning:** Do not over tighten screws, or it could damage the Table Top.

+ Parts Included

① TABLE TOP 1PC

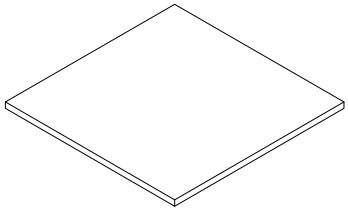

② TABLE BASE 2PCS

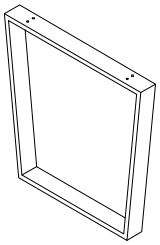

+ Hardware Included

A	ALLEN WRENCH M8	1PC 
B	BOLT M8*25MM	8PCS 
C	FLAT WASHER Ø18*Ø8	8PCS 

ASSEMBLY INSTRUCTIONS

SKU/ITEM#-212/235-E

1

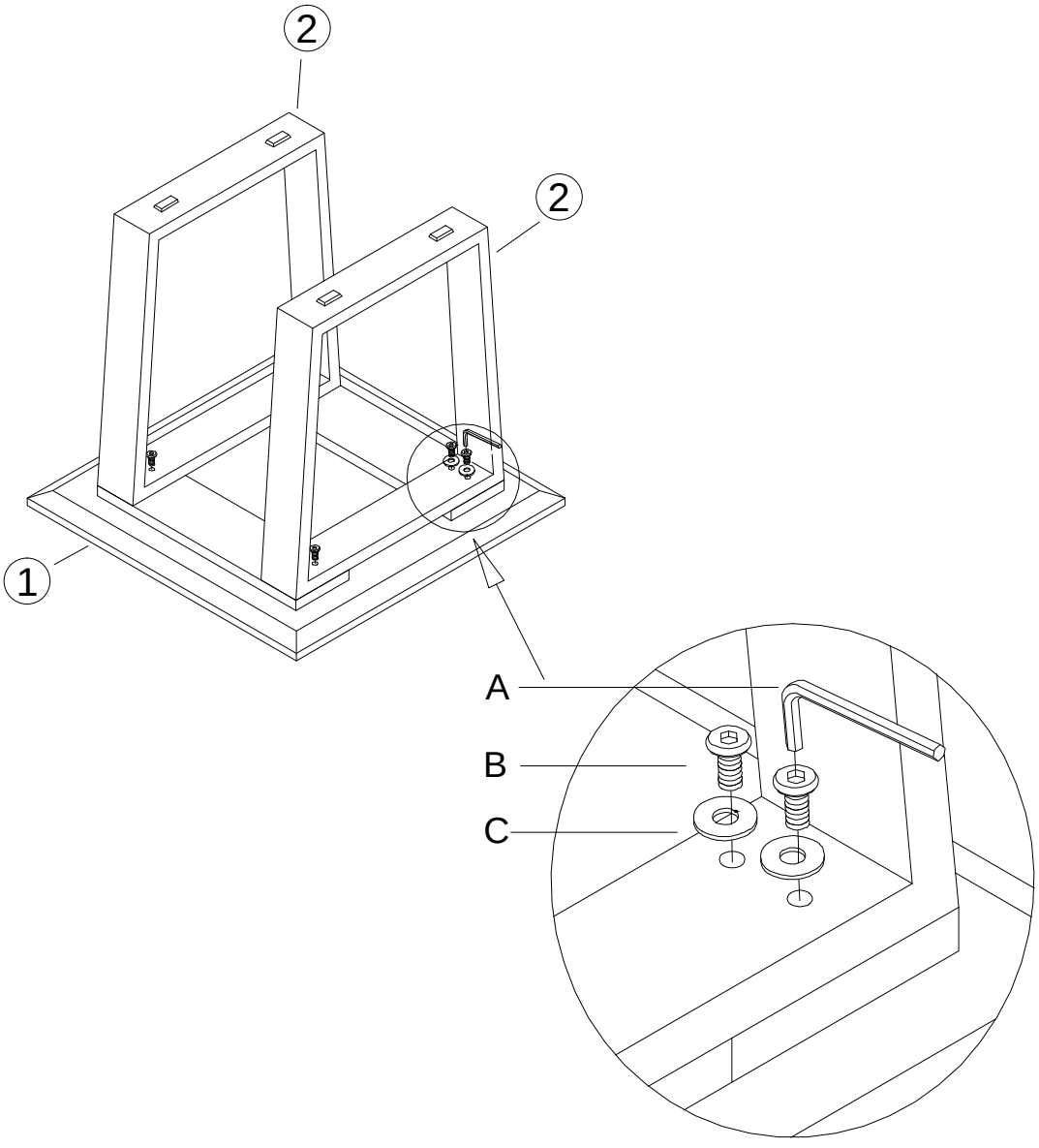

Note: Do not over tighten screws

NOTE: For questions about parts or assembly please email support@meridianfurnitureusa.com or call us at 718-758-4455.