ASSEMBLY INSTRUCTIONS

SKU - 232 End Table

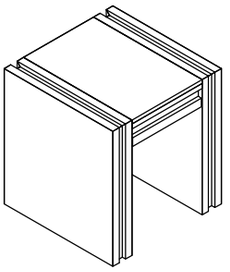

+ Do Not Use power Tools



+ Suggested Adults



Note: For questions about pares or assembly please email support@meridianfurnitureusa.com or call us at 717-758-4455

1 Read ins tructions cover to cover.

2 Save a ll packaging until as s embly is completed.

1 IMPORTANT SAFETY INFORMATION

Do not assemble the product if any of the following parts arrived damaged:

Part# -End Table

Part# -Right Base

Part# -Left Base

2 IMPORTANT ASSEMBLY INFORMATION

Assembly step Use Bolt B to connect Part 2 to Part 1, use Bolt B to connect Part 3 to Part 1

*Warning: Do not over tighten screws,or it could damage the End Table

+ Parts Included

①

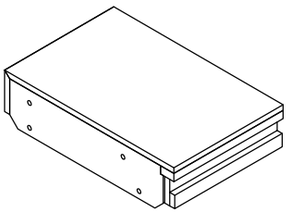

1PC

②

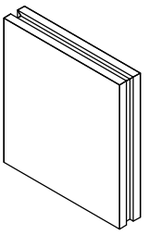

1 PC

③

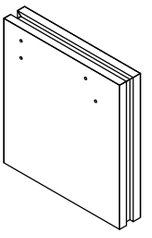

1 PC

+ Hardware Included

A



Allen Wrench (4MM) (1PC)

B

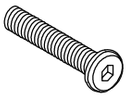

Bolt (5/16 * 1") (8PCS)

C



Washer (5/16) (8PCS)

D



Flat Washer (5/16 * 3/4") (8PCS)

ASSEMBLY INSTRUCTIONS

SKU - 232 End Table

1

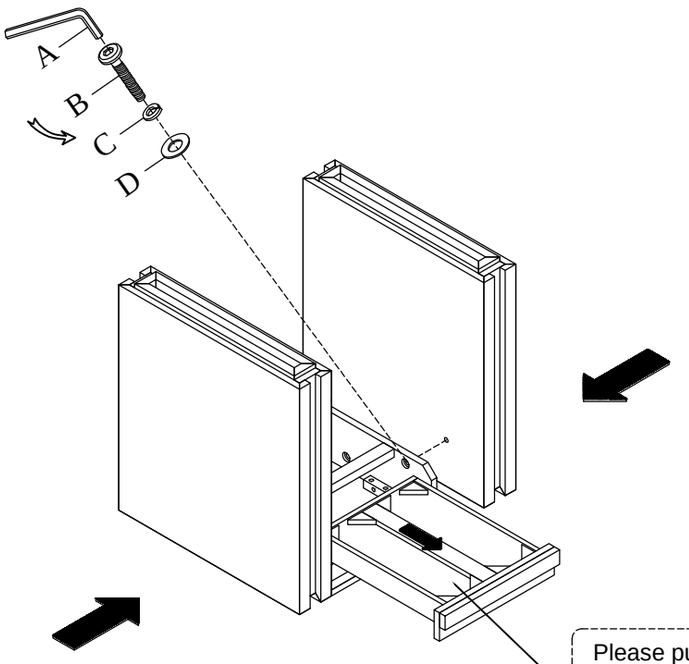

Please push out the drawer to assemble Leg to Table .

2

