ASSEMBLY INSTRUCTIONS

SKU/ITEM # - 221-CT/COFFEE TABLE

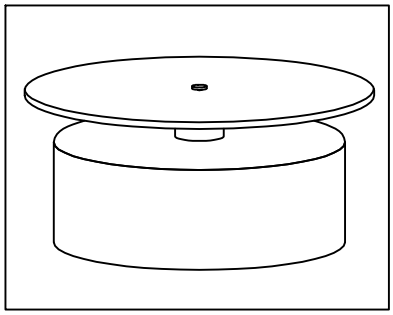

+ Do Not Use Power Tools



+ Suggested Adults



NOTE: For questions about parts or assembly please email support@meridianfurnitureusa.com or call us at 718-758-4455.

1. Read instructions cover to cover.
2 Save all packaging until assembly is completed.

+Parts Included

① Marble Top
(1 pc)

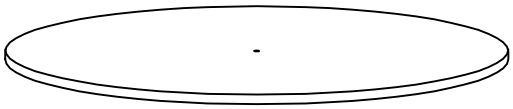

② Wooden base with S.S pedestal
(1 pc)

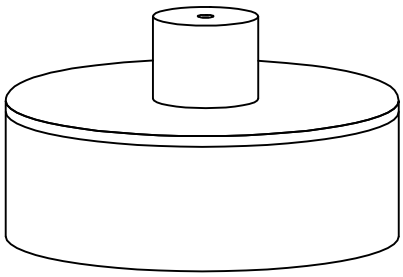

1. IMPORTANT SAFETY INFORMATION

Do not assemble the product if any of the following parts arrived damaged :
Part # 1 - Marble top
Part # 2 - Wooden base with S.S pedestal

2. IMPORTANT ASSEMBLY INFORMATION

Assembly step : Use bolt A to connect Part 1 to Part 2 .

***Warning** : Do not over tighten screws, or it could damage the Table Top.

+ Hardware Included

A . Top Screw Cap
(1 pc)



ASSEMBLY INSTRUCTIONS

SKU/ITEM # - 221-CT/COFFEE TABLE

meridian furniture

1

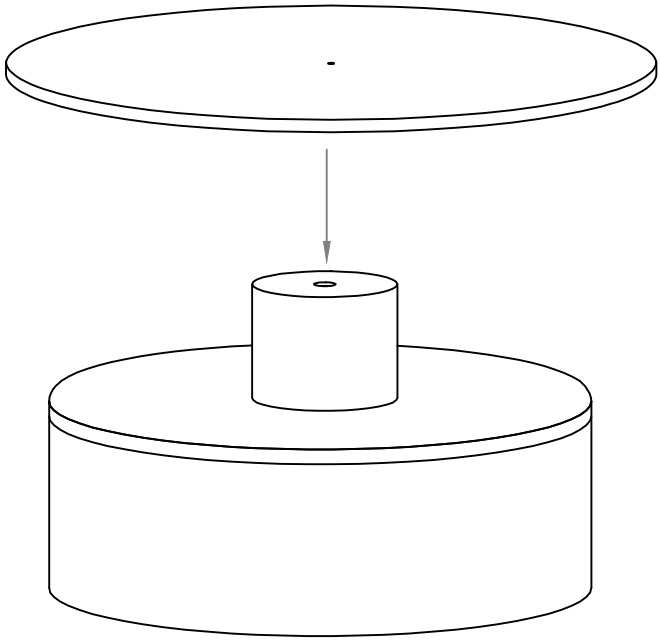

2

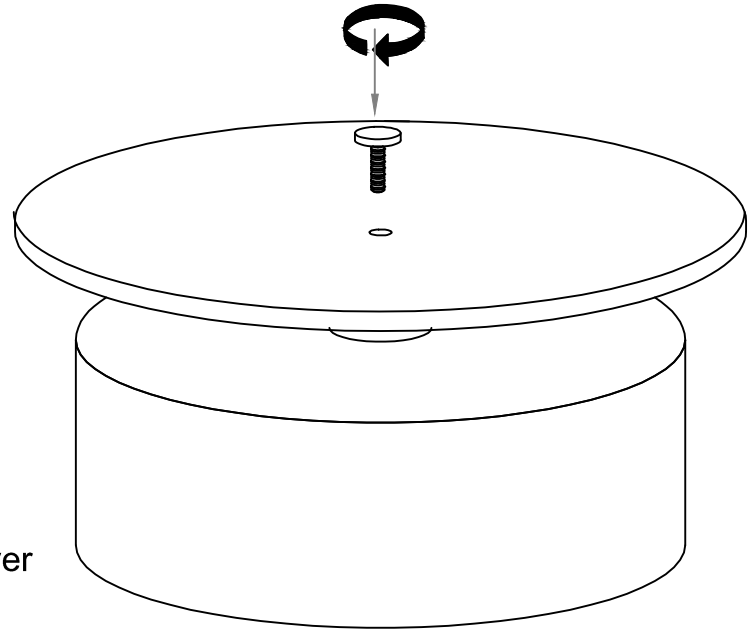

Note: Do not over tighten screws

NOTE: For questions about parts or assembly please email support@meridianfurnitureusa.com or call us at 718-758-4455.