ASSEMBLY INSTRUCTIONS

meridian furniture

SKU/ITEM # -220-DT60

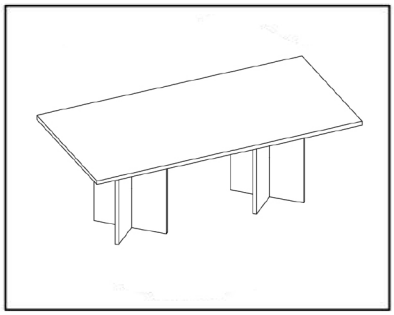

+ Do Not Use Power Tools



+ Suggested Adults

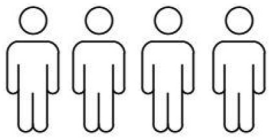

NOTE: For questions about parts or assembly please email support@meridianfurnitureusa.com or call us at 718-758-4455.

1. Read instructions cover to cover.
2 Save all packaging until assembly is completed.

1. IMPORTANT SAFETY INFORMATION

Do not assemble the product if any of the following parts arrived damaged :

Part # 1 - Marble top
Part # 2 - Marble Base

2. IMPORTANT ASSEMBLY INFORMATION

Assembly step :

Step - 1 Use bolt and iron clip- A, B, C,E & F to connect Part 1 and Part 2.

'Warning : Do not over tighten screws, or it could damage the Table Top.

+Parts Included

(1) Marble Top - 1 Pc

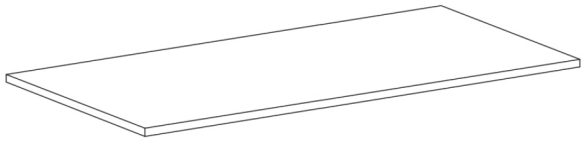

(2) Marble Base - 4 Pcs

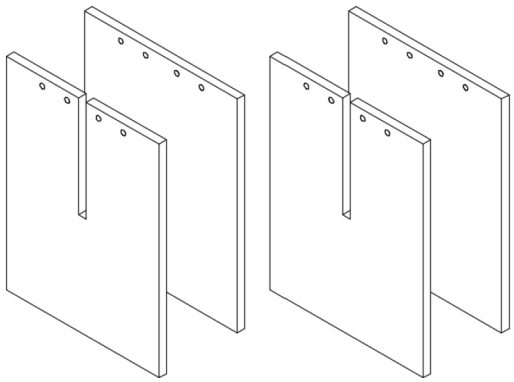

+ Hardware Included

A . Allen Bolts 8x20 (24 Pcs)



B . Allen Screw 8x15 (16 Pcs)



C . Washer 25x8(24 Pcs)



D. Allenkey 5mm (1 Pc)



E. Iron Clip (8 Pc)

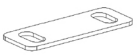

F. Iron L Clip (8 Pcs)

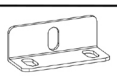

G. placement jig mdf(1 Pcs)

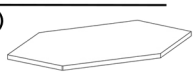

ASSEMBLY INSTRUCTIONS

meridian. furniture

SKU/ITEM # - 220-DT60

① 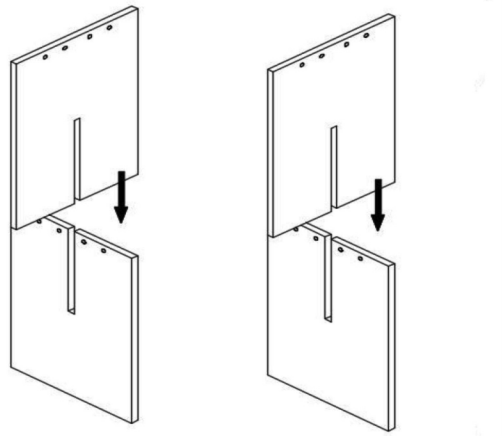

② 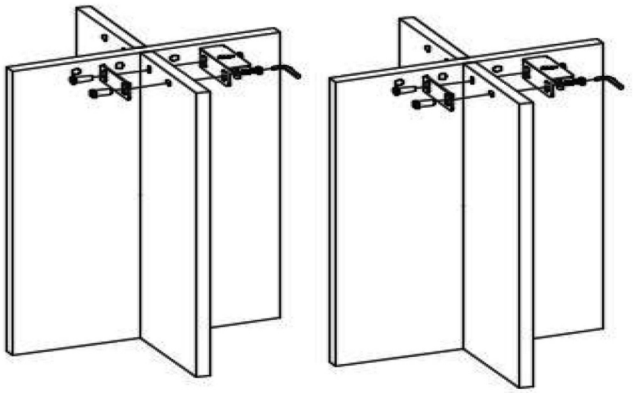

③ 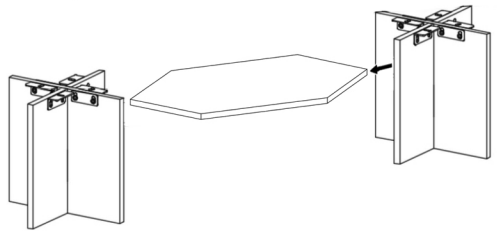

④ Remove mdf jig after Leg placement 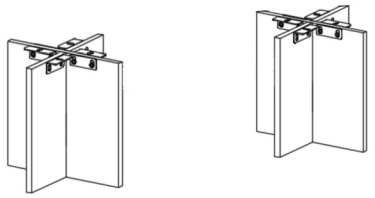

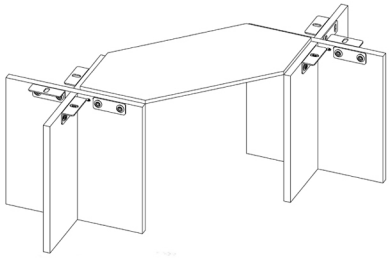

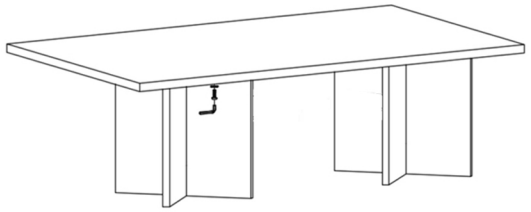

Note : Do not over tighten screws

NOTE: For questions about parts or assembly please email support@meridianfurnitureusa.com or call us at 718-758-4455.