ASSEMBLY INSTRUCTION

meridian furniture

SKU / ITEM# 22083 Bench

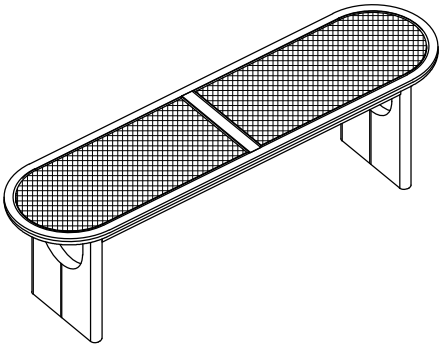

+ Do Not Use Power Tools



+ Suggested Adults



NOTE: For questions about parts or assembly please email support@meridianfunitureusa.com or call us at 718-758-4455.

1 Read instructions cover to cover.
2 Save all packinging until assembly is completed

+ Parts Included

1 Seat panel (1pc)

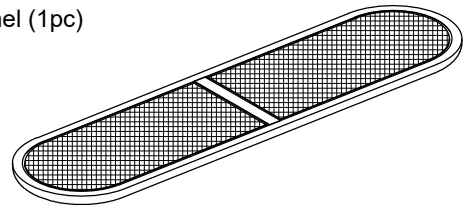

2 Stretcher (2pcs)

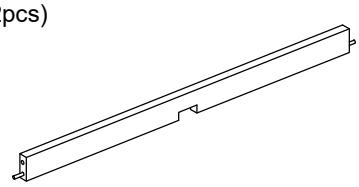

3 Leg (2pcs)

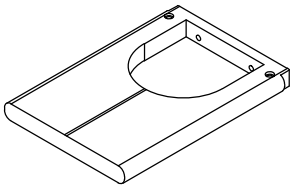

1 IMPORTANT SAFETY INFORMATION

Do not assemble the product if any of the following parts arrived damaged:
Part 1 - Seat panel
Part 2 - Stretcher
Part 3 - Leg

Do not assemble if any of the following hardware parts are missing:
Part A - Bolt 5/16 x 38 mm
Part B - Spring washer
Part C - Flat washer 13mm
Part D - Flat washer 19mm
Part E - Allen Key

2 IMPORTANT ASSEMBLY INFORMATION

Assembly Step: If loosening persists,please make sure to tighten all the bolts periodically,or use a thread locker adhesive.

+ Hardware Included

Ⓐ Bolts 5/16 x 38mm (8/pcs)



Ⓑ Spring washer (8/pcs)



Ⓒ Flat washer 13mm (4/pcs)



Ⓓ Flat washer 19mm (4/pcs)



Ⓔ Allen Key (1/pc)



Hardware : Each of the above hardware including extra 1pc.

ASSEMBLY INSTRUCTION

SKU / ITEM# 22083 Bench

meridian furniture

1

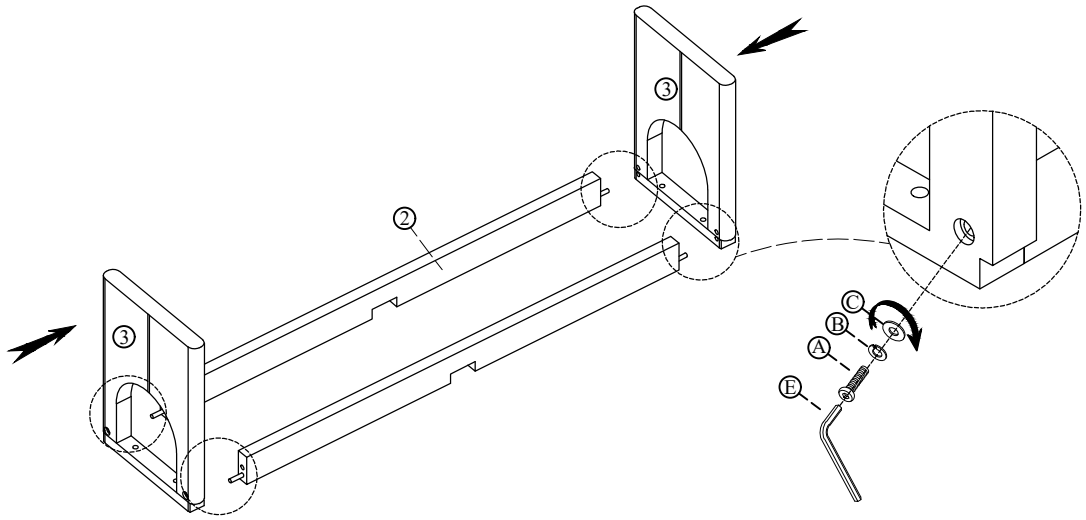

2

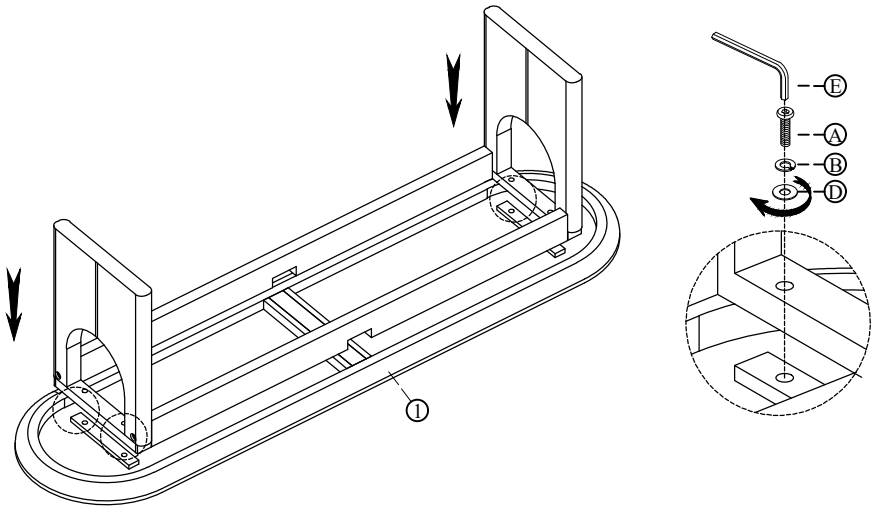

3

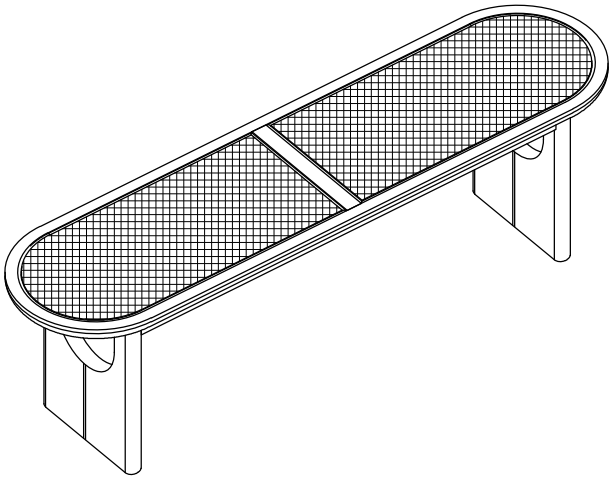

The assembly of the Bench is complete

NOTE: For questions about parts or assembly please email support@meridianfunitureusa.com or call us at 718-758-4455.