ASSEMBLY INSTRUCTIONS

22011/22012 - Bench

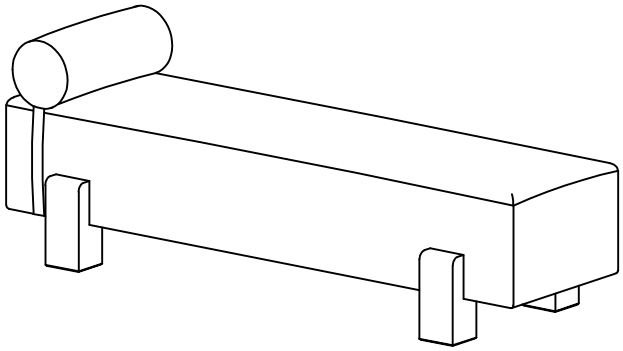

+ Do Not Use Power Tools



+ Suggested Adults

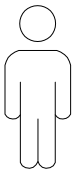

NOTE: For questions about parts or assembly please email support@meridianfurnitureusa.com or call us at 718-758-4455.

1 Read instructions cover to cover.
2 Save all packaging until assembly is completed.

1 IMPORTANT SAFETY INFORMATION

Do not assemble the product if the parts arrived damaged.

Do not assemble if Hardware parts are missing.

2 IMPORTANT ASSEMBLY INFORMATION

Assembly Step lf loosening persists, please make sure to tighten all the bolts periodically, or use a thread locker adhesive.

+ Parts Included

① Seat frame (1 pc)

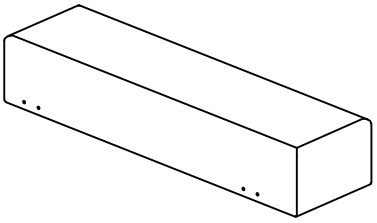

② Legs (4 pcs)

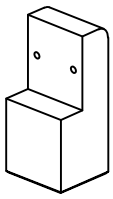

③ Pillow (1 pc)

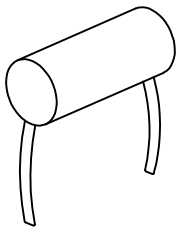

+ Parts Included

A. Bolt
Ø8x45mm (8 pcs)

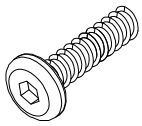

B. Spring Washer
Ø8xØ12mm (8 pcs)



C. Flat Washer
Ø8xØ19mm (8 pcs)

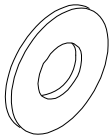

D. Allen Key (1 pc)

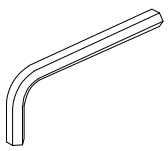

ASSEMBLY INSTRUCTIONS

meridian furniture

22011/22012 - Bench

①

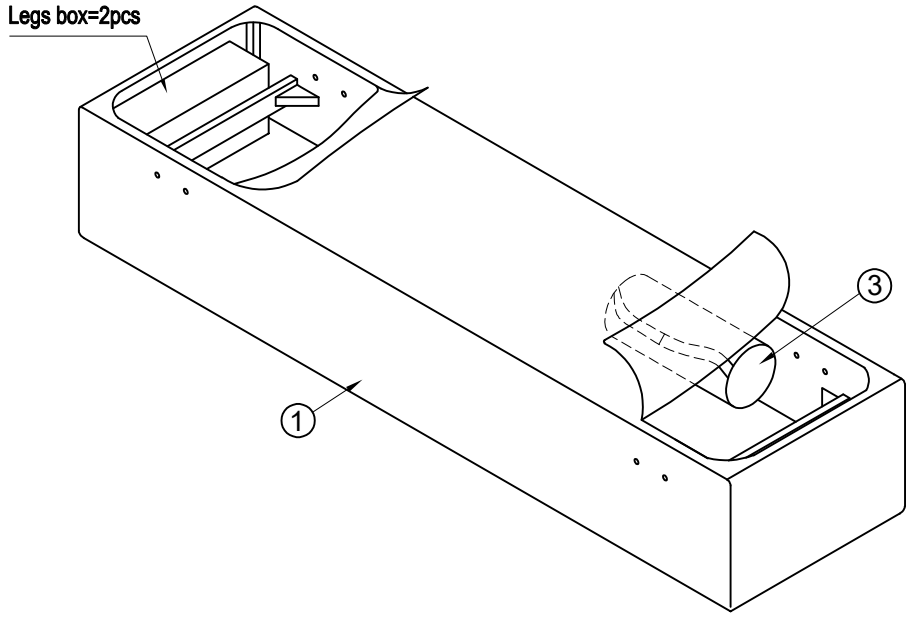

②

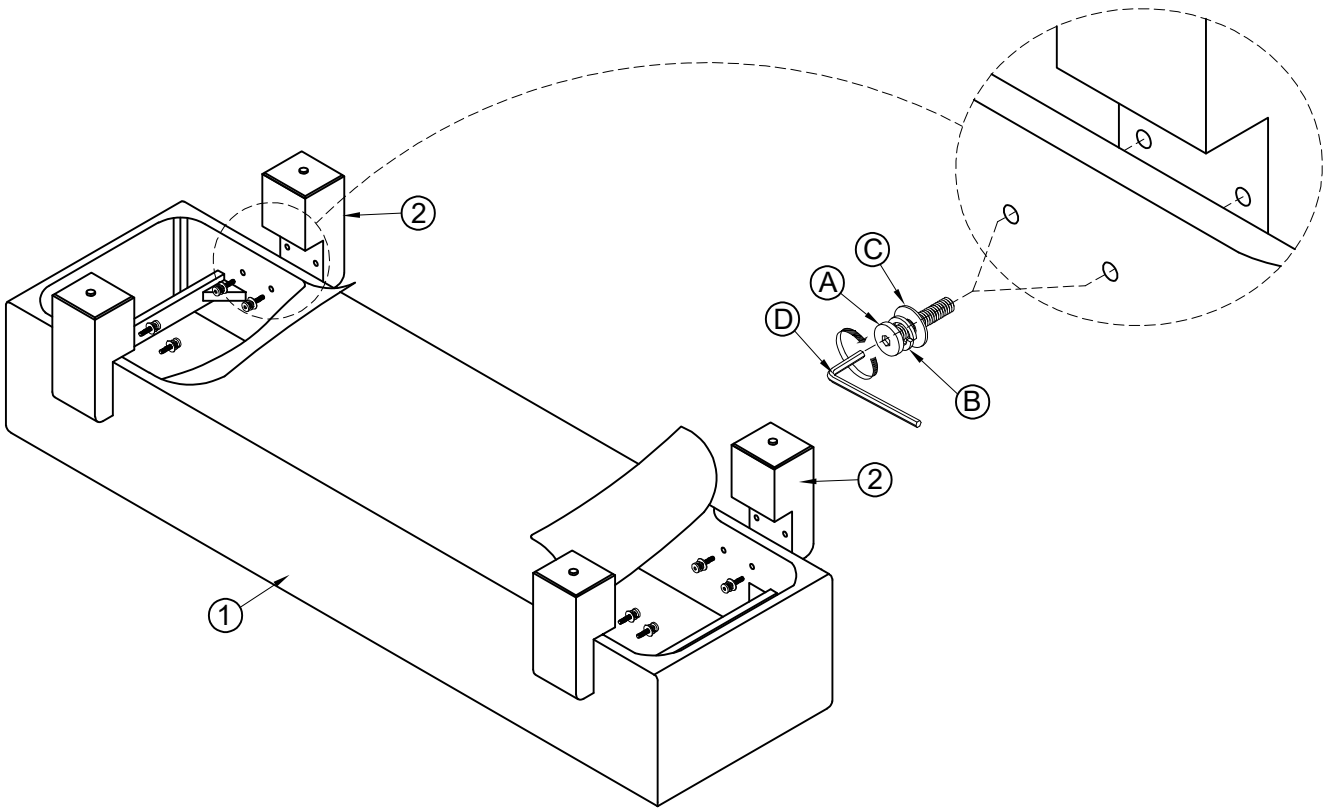

NOTE: For questions about parts or assembly please email support@meridianfurnitureusa.com or call us at 718-758-4455.

www.MeridianFurnitureUSA.com | support@meridianfurnitureusa.com

ASSEMBLY INSTRUCTIONS

22011/22012 - Bench

③

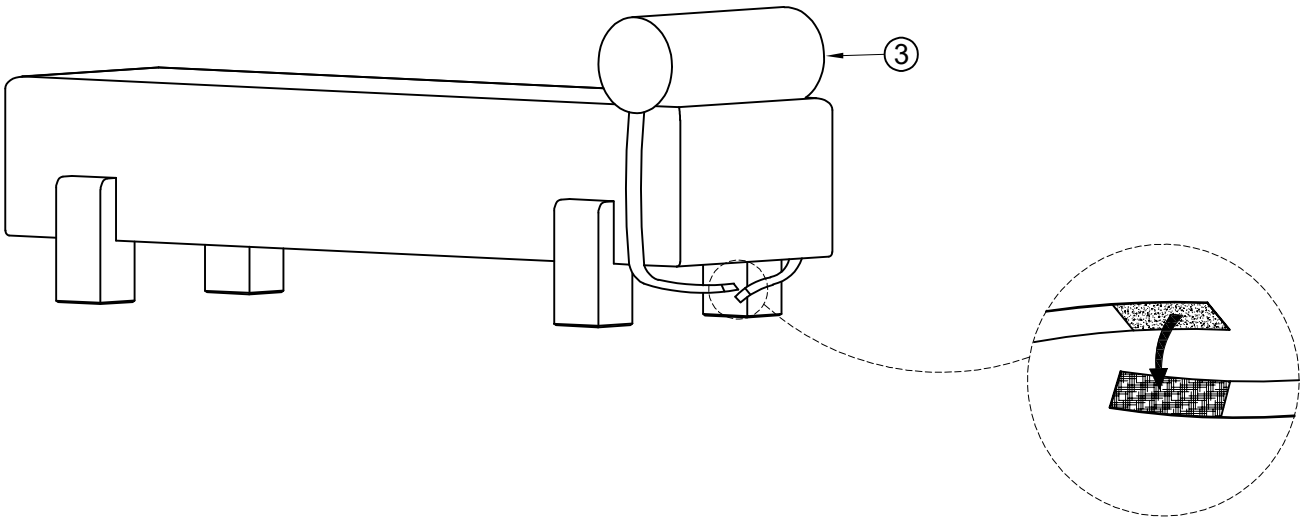

④

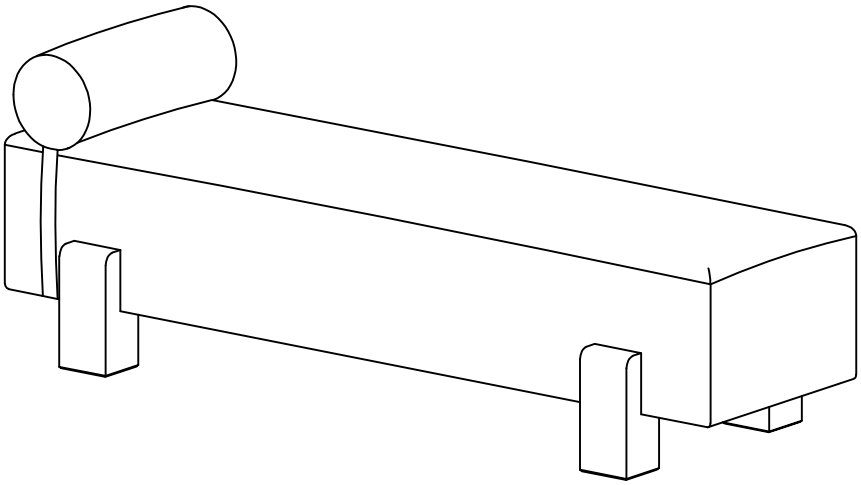

NOTE: For questions about parts or assembly please email
support@meridianfurnitureusa.com or call us at 718-758-4455.
www.MeridianFurnitureUSA.com | support@meridianfurnitureusa.com