ASSEMBLY INSTRUCTIONS

208-CT COFFEE TABLE

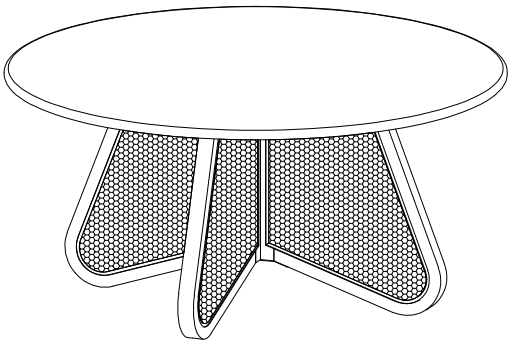

+Parts Included

① Center post (1 pc)

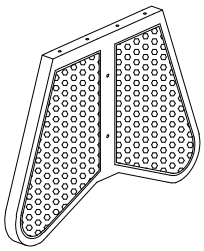

② Side post (2 pcs)

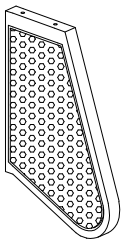

③ Connective panel (1 pc)

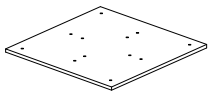

④ Top panel (1 pc)



+Do Not Use Power Tools



+Suggested Adults



NOTE: For questions about parts or assembly please email support@meridianfurnitureusa.com or call us at 718-758-4455.

1 Read instructions cover to cover.
2 Save all packaging until assembly is completed.

+Parts Included

A. Bolt
Ø6x25mm (5 pcs)

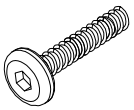

B. Bolt
Ø8x25mm (8 pcs)

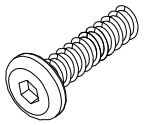

C. Spring Washer
Ø6xØ12mm (5 pcs)



D. Flat Washer
Ø6xØ19mm (5 pcs)



E. Spring Washer
Ø8xØ12mm (8 pcs)



F. Flat Washer
Ø8xØ19mm (8 pcs)



G. Bracket Metal (1 pc)

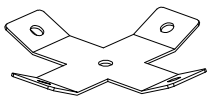

H. Allen Key (1 pc)

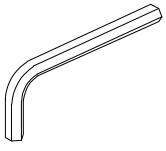

1 IMPORTANT SAFETY INFORMATION

Do not assemble the product if the parts arrived damaged.

Do not assemble if Hardware parts are missing.

2 IMPORTANT ASSEMBLY INFORMATION

Assembly Step If loosening persists, please make sure to tighten all the bolts periodically, or use a thread locker adhesive.

ASSEMBLY INSTRUCTIONS

meridian furniture

208-CT COFFEE TABLE

①

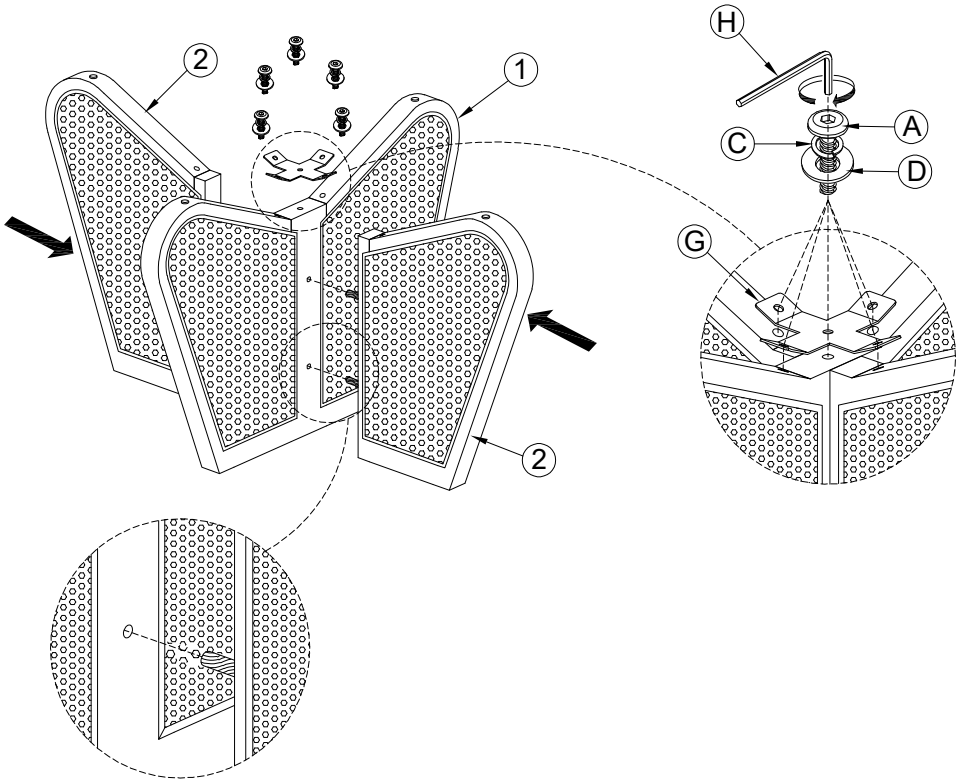

②

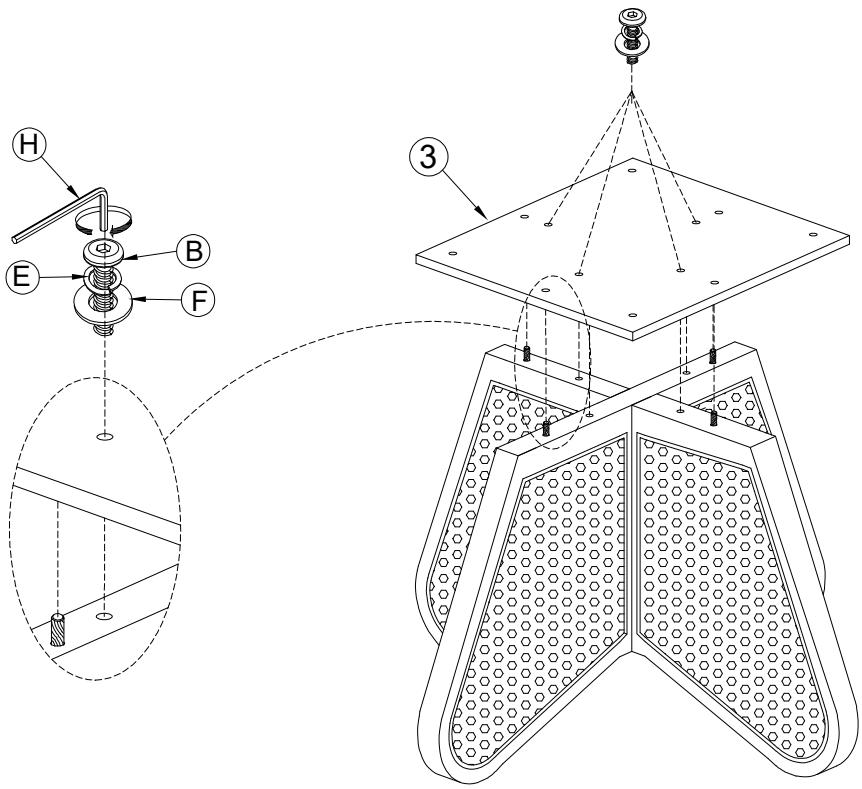

NOTE: For questions about parts or assembly please email support@meridianfurnitureusa.com or call us at 718-758-4455.

ASSEMBLY INSTRUCTIONS

meridian furniture

208-CT COFFEE TABLE

③

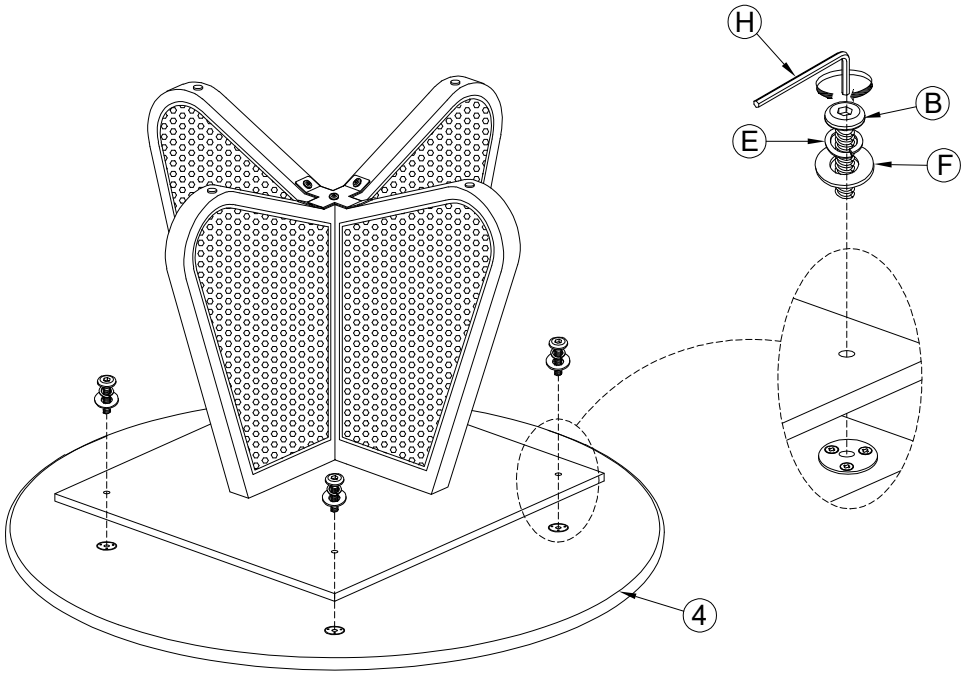

④

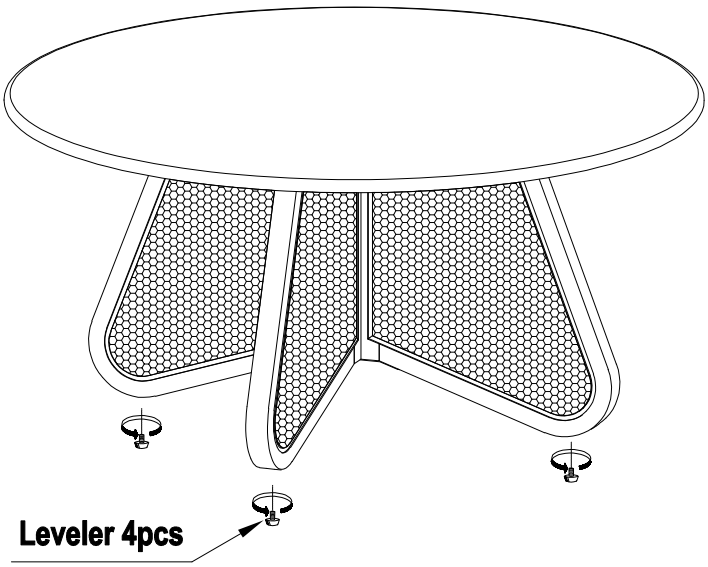

NOTE: For questions about parts or assembly please email support@meridianfurnitureusa.com or call us at 718-758-4455.