ASSEMBLY INSTRUCTIONS
SKU/ITEM # - 204-E

meridian furniture

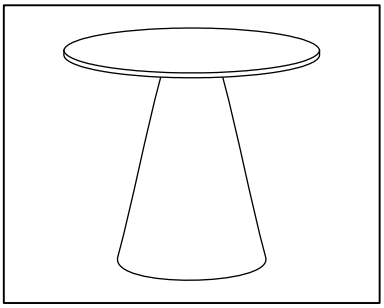

+Parts Included

① Top
(1 Pc)

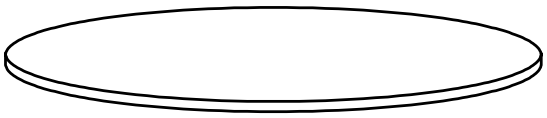

② Base
(1 Pc)

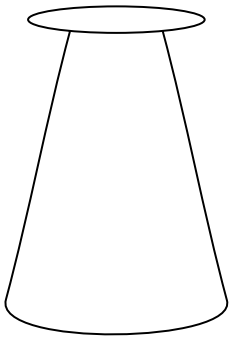

+Do Not Use Power Tools



+ Suggested Adults



NOTE: For questions about parts or assembly please email support@meridianfurnitureusa.com or call us at 718-758-4455.

1. Read instructions cover to cover.
2 Save all packaging until assembly is comleted.

1. IMPORTANT SAFETY INFORMATION
Do not assemble the product if any of the following parts arrived damaged
Part # 1 - Top
Part # 2 - Base

2. IMPORTANT ASSEMBLY INFORMATION
Assembly step : use bolt A to connect Part 1 to Part 2 .

***Warning :** Do not over tighten screws, or it could damage the Table Top.

+ Hardware Included

A. Allen bolt 4 (Pcs)



B . Allen KEY (1Pc)

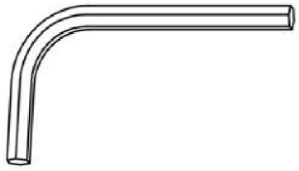

ASSEMBLY INSTRUCTIONS

SKU/ITEM # - 204-E

meridian furniture

1

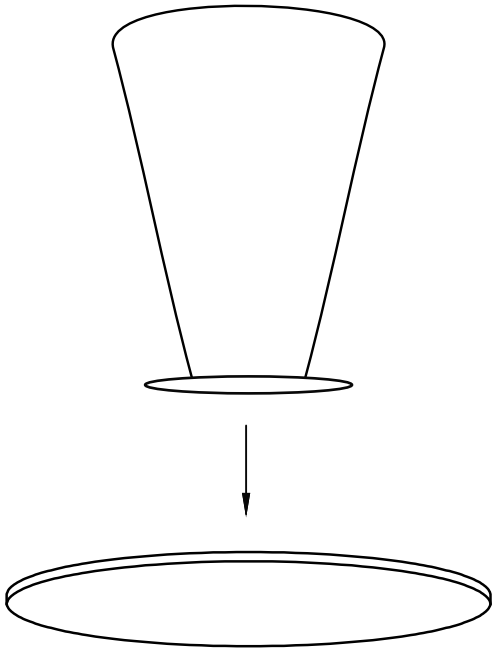

2

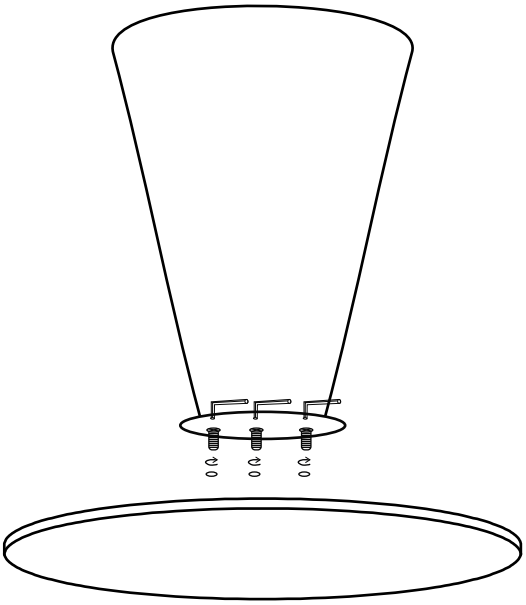

Note: Do not over tighten screws

NOTE: For questions about parts or assembly please email support@meridianfurnitureusa.com or call us at 718-758-4455.