ASSEMBLY INSTRUCTIONS

201-CT GOLD RECTANGULAR COFFEE TABLE
203-CT CHROME RECTANGULAR COFFEE TABLE

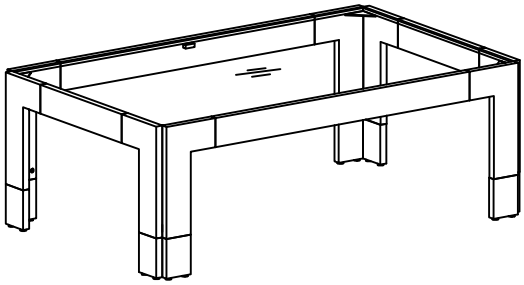

+ Do Not Use PowerTools



+ Suggested Adults

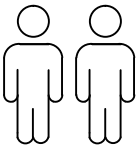

NOTE: For questions about parts or assembly please email support@meridianfurnitureusa.com or call us at 718-758-4455.

1 Read instructions cover to cover.

2 Save all packaging until assembly is completed.

+ Parts Included

① Leg

4PCS

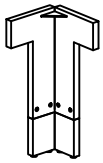

② Acrylic Long Rail

2PCS

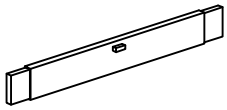

③ Acrylic Short Rail

2PCS



④ Glass Top

1PC

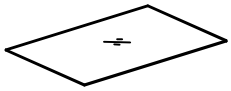

1 IMPORTANT SAFETY INFORMATION

Do not assemble the product if any of the following parts arrived damaged:

Part # -Table Top

Tempered Glass Warning: Should the tempered glass chip at ANY point throughout ownership, please immediately discontinue use of the table to avoid injury.

CAUTION : DO NOT place hot objects (100°F or more) directly on the glass surface.

2 IMPORTANT ASSEMBLY INFORMATION

Assembly Step Use Bolt A to connect Part 1 to Part 4.

+ Hardware Included

A Bolt(1/4"*5/8")

16 PCS



B Allen Key(4mm)

1 PC



C Antiskid Pad

6 PCS



ASSEMBLY INSTRUCTIONS

meridian furniture

201-CT GOLD RECTANGULAR COFFEE TABLE
203-CT CHROME RECTANGULAR COFFEE TABLE

①

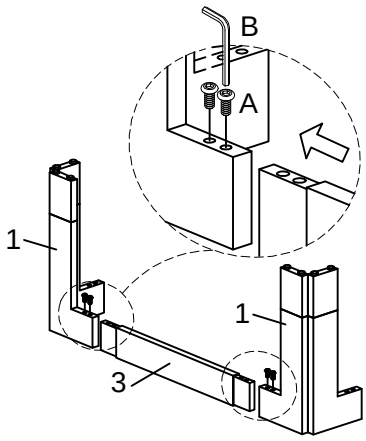

Note: Do not fully tighten the bolts at this step.

②

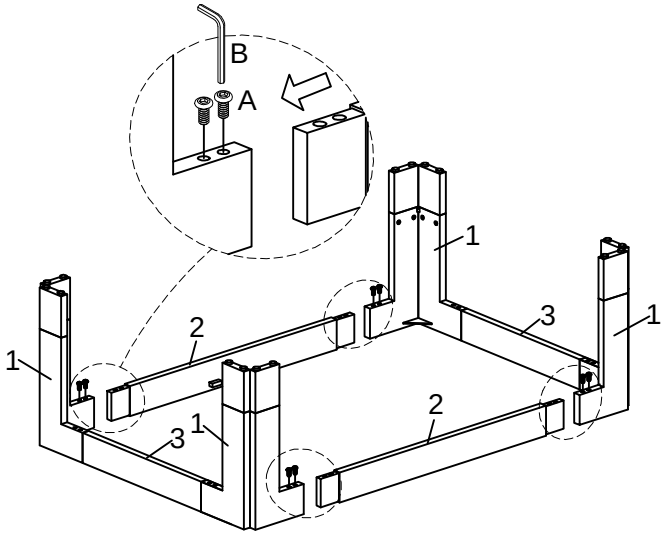

Note: Do not fully tighten the bolts at this step.

③

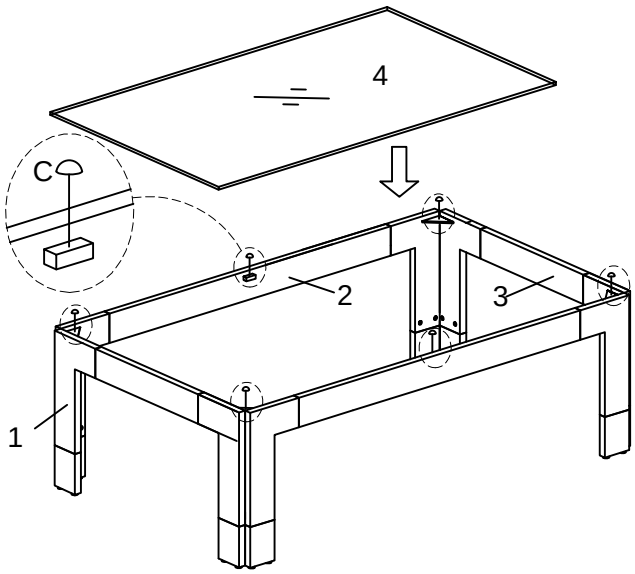

Note: Fully tighten all bolts at this step.

NOTE: For questions about parts or assembly please email support@meridianfurnitureusa.com or call us at 718-758-4455.
www.MeridianFurnitureUSA.com | support@meridianfurnitureusa.com