ASSEMBLY INSTRUCTIONS

SKU/ITEM#:182 BENCH

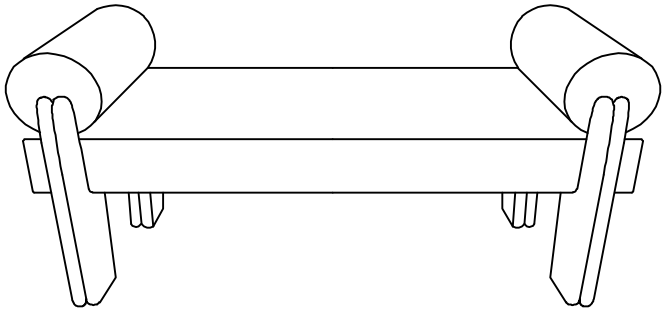

+ Do Not Use PowerTools



+ Suggested Adults



NOTE: For questions about parts or assembly please email support@meridianfurnitureusa.com or call us at 718-758-4455.

1 Read instructions cover to cover.

2 Save all packaging until assembly is completed.

1 IMPORTANT SAFETY INFORMATION

Do not assemble the product if any of the following parts arrived damaged:

Part ① Cushion

Part ② Leg

Do not assemble if any of the following Hardware parts are missing:

Part A Bolt 5/16"*1-1/4"

Part B Flat washer 5/16"

Part C Spring washer 5/16"

Part D Allen wrench 5/16"

2 IMPORTANT ASSEMBLY INFORMATION

Assembly Step If loosening persists, Please make sure to tighten all the bolts periodically, or use a thread locker adhesive.

+ Parts Included

① Cushion 1PC

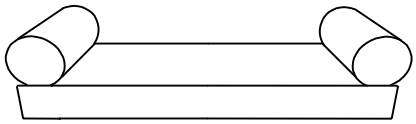

② Leg 4PCS

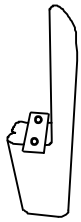

+ Hardware Included

A Bolt 5/16"*1-1/4" 8PCS



B Flat washer 5/16" 8PCS



C Spring washer 5/16" 8PCS



D Allen wrench 5/16" 1PC



ASSEMBLY INSTRUCTIONS

meridian furniture

SKU/ITEM#:182 BENCH

1

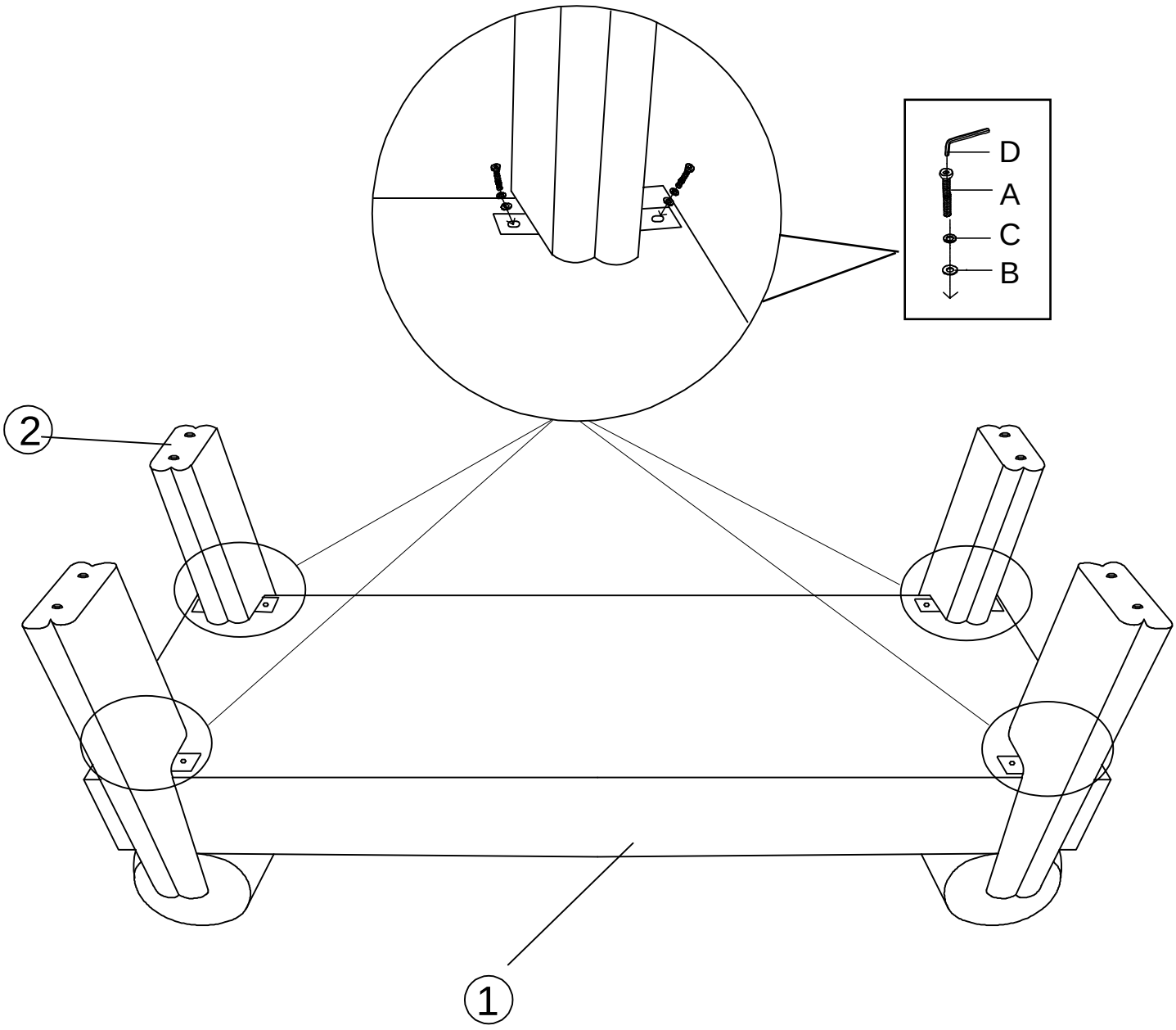

NOTE: For questions about parts or assembly please email support@meridianfurnitureusa.com or call us at 718-758-4455.