ASSEMBLY INSTRUCTIONS
SKU 176/177/178/179-BENCH

meridian furniture

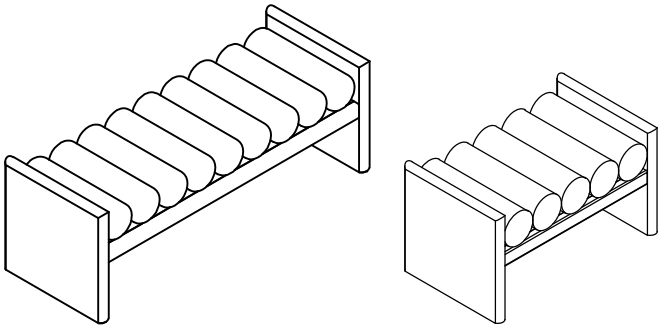

+ Do Not Use Power Tools



+ Suggested Adults



NOTE: For questions about parts or assembly please email support@meridianfurnitureusa.com or call us at 718-758-4455

1 Read instructions cover to cover.

2 Save all packaging until assembly completed.

+ Parts included

① Seat
(1 of pc)

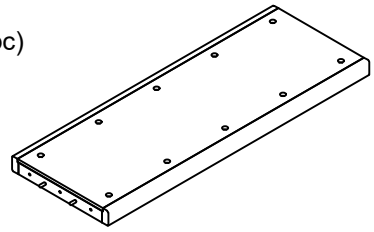

② Legs
(2 of pcs)

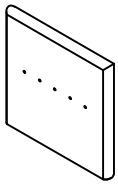

③ Cushion
(1 of pc)

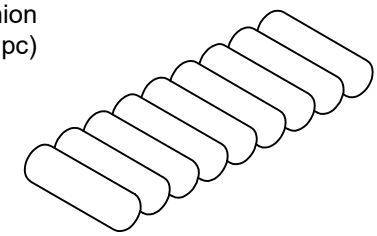

1 IMPORTANT SAFETY INFORMATION

Do not assemble the product if any of the following parts arrived damaged:
Part 1 - Seat
Part 2 - Legs
Part 3 - Cushion

Do not assemble if any of the following Hardwave parts are missing:
Part A - Allen Key
Part B - Bolt
Part C - Spring Washer
Part D - Flat Washer

2 IMPORTANT ASSEMBLY INFORMATION

Assembly Step If loosening persist, please make sure to tighten all the bolts periodically, or use a thread locker adhesive.

+ Hardwave Included

A Allen Key 5mm
(1 of pc)

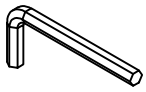

B Hex-head Bolt
Ø5/16" x 45mm
(6 of pcs)

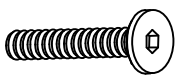

C Spring Washer
Ø5/16"
(6 of pcs)



D Flat Washer
Ø5/16"
(6 of pcs)



Hardware : Each of the above hardware including extra 1pc.

ASSEMBLY INSTRUCTIONS
SKU 176/177/178/179-BENCH

meridian furniture

1

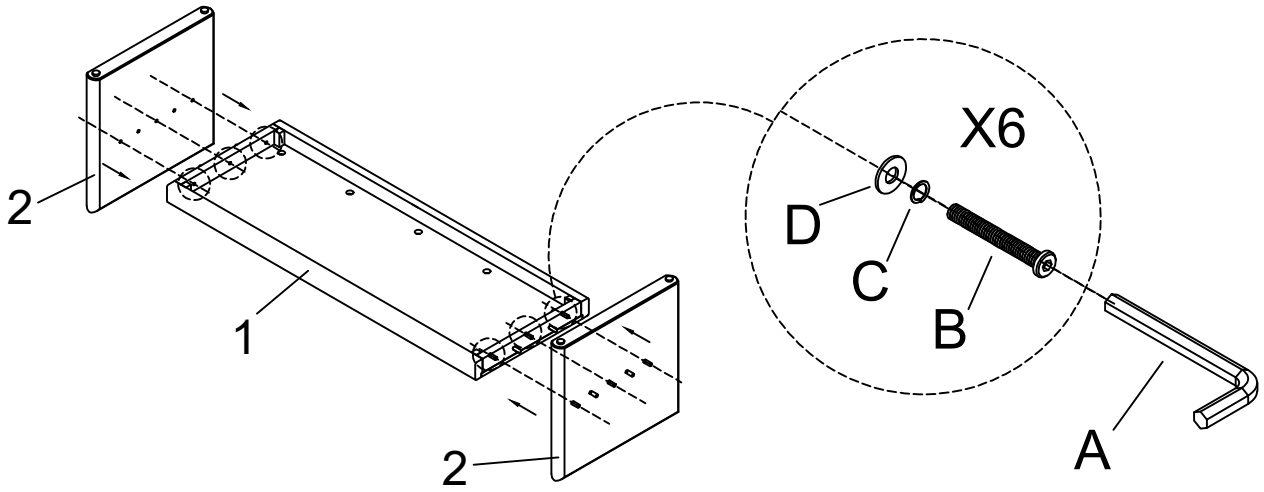

2

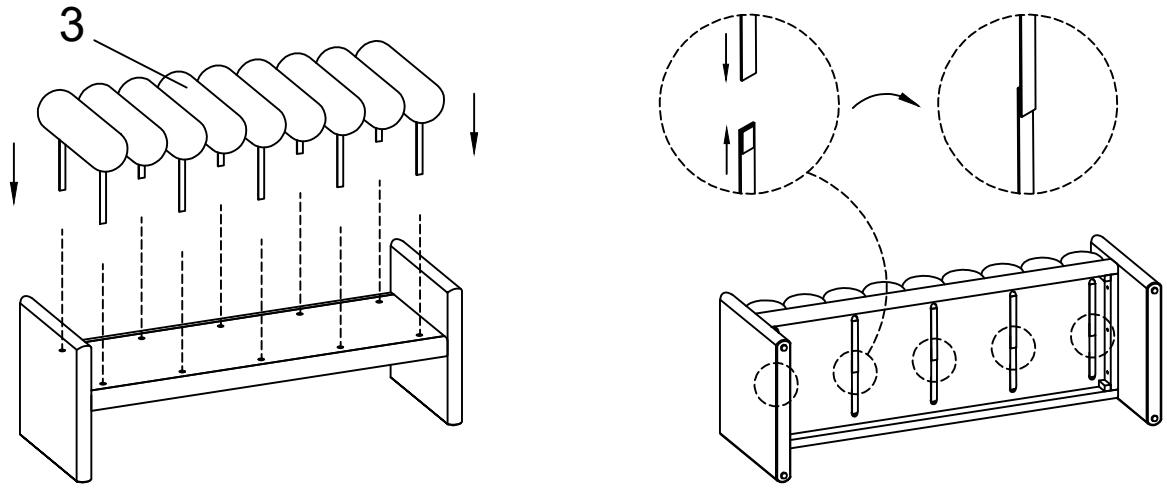

3

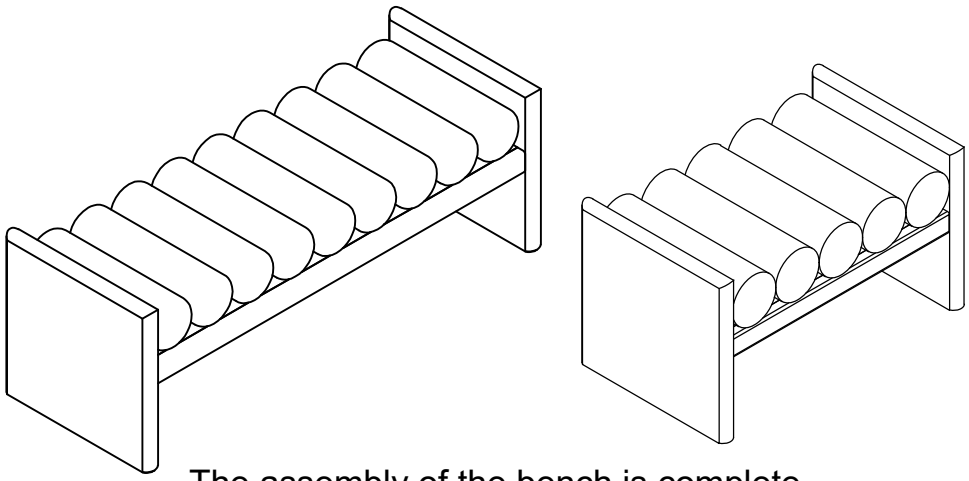

The assembly of the bench is complete

NOTE: For questions about parts or assembly please email support@meridianfurnitureusa.com or call us at 718-758-4455.

www.MeridianFurnitureUSA.com | support@meridianfurnitureusa.com