ASSEMBLY INSTRUCTIONS

SKU / ITEM# 165- OFFICE CHAIR

meridian furniture

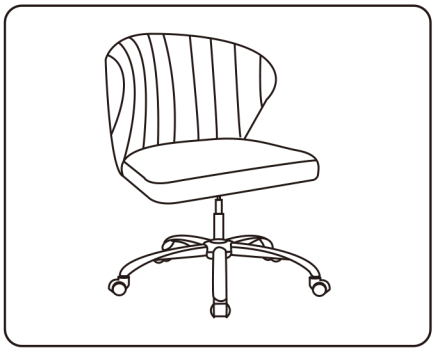

+ Do Not Use Power Tools



+ Suggested Adults



NOTE: For questions about parts or assembly please email support@meridianfurnitureusa.com or call us at 718-758-4455.

1 Read instructions cover to cover.

2 Save all packaging until assembly is completed.

+ Parts Included

① Gas lift 1PC



② Spider base 1PC

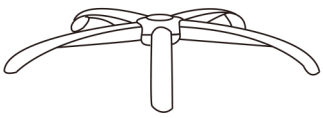

③ Casters 5PCS



④ Sest 1PC



⑤ Handle Lift 1PC

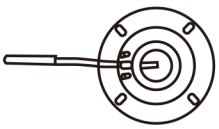

⑥ Metal base cap 1PC



1 IMPORTANT SAFETY INFORMATION

Do not assemble the product if any of the following parts arrived damaged:

Part ①	-Gas lift	Part ④	-Seat
Part ②	-Spider base	Part ⑤	-Handle Lift
Part ③	-Casters	Part ⑥	-Metal base cap

Do not assemble if any of the following Hardware parts are missing:

Part A	-Bolt
Part B	-Wrench

2 IMPORTANT ASSEMBLY INFORMATION

Assembly Step If loosening persists, please make sure to tighten all the bolts periodically, or use a thread locker adhesive.

+ Hardware Included

A BOLT 4PCS

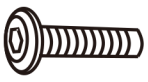

B Wrench 1PC

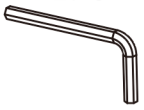

ASSEMBLY INSTRUCTIONS

SKU / ITEM# 165- OFFICE CHAIR

meridian furniture

1

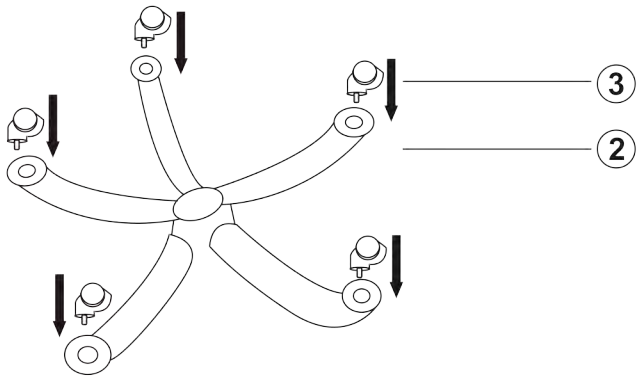

2

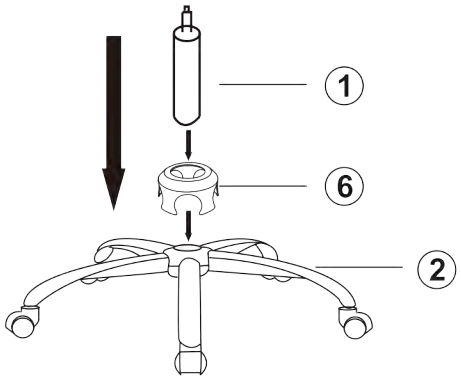

3

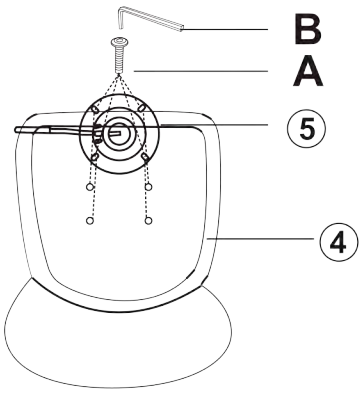

4

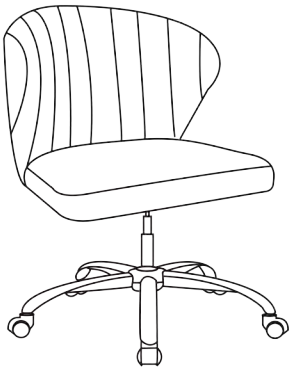

NOTE: For questions about parts or assembly please email support@meridianfurnitureusa.com or call us at 718-758-4455
www.MeridianFurnitureUSA.com|support@meridianfurnitureusa.com