ASSEMBLY INSTRUCTIONS

SKU/ITEM#:117 BENCH

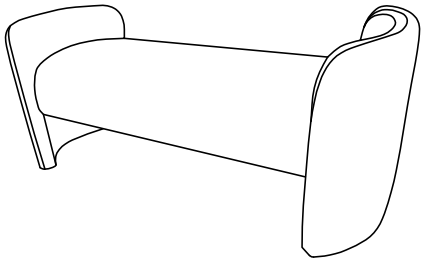

+ Parts Included

① Seat frame 1PC

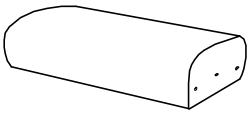

② Arm 2PCS

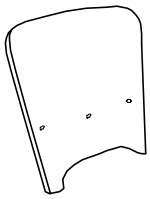

+ Do Not Use PowerTools



+ Suggested Adults



NOTE: For questions about parts or assembly please email support@meridianfurnitureusa.com or call us at 718-758-4455.

1 Read instructions cover to cover.

2 Save all packaging until assembly is completed.

+ Hardware Included

A Bolt 5/16"*2-1/4" 6PCS



B Flat washer 5/16" 6PCS



C Spring washer 5/16" 6PCS



D Allen wrench 5/16" 1PC



1 IMPORTANT SAFETY INFORMATION

Do not assemble the product if any of the following parts arrived damaged:

Part ① Seat frame

Part ② Arm

Do not assemble if any of the following Hardware parts are missing:

Part A Bolt 5/16"*2-1/4"

Part B Flat washer 5/16"

Part C Spring washer 5/16"

Part D Allen wrench 5/16"

2 IMPORTANT ASSEMBLY INFORMATION

Assembly Step If loosening persists, Please make sure to tighten all the bolts periodically, or use a thread locker adhesive.

ASSEMBLY INSTRUCTIONS

SKU/ITEM#:117 BENCH

meridian furniture

1

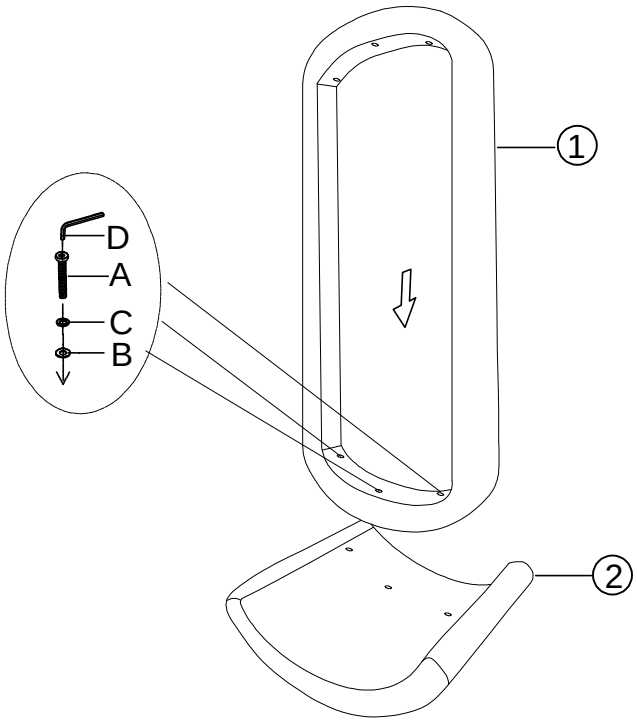

2

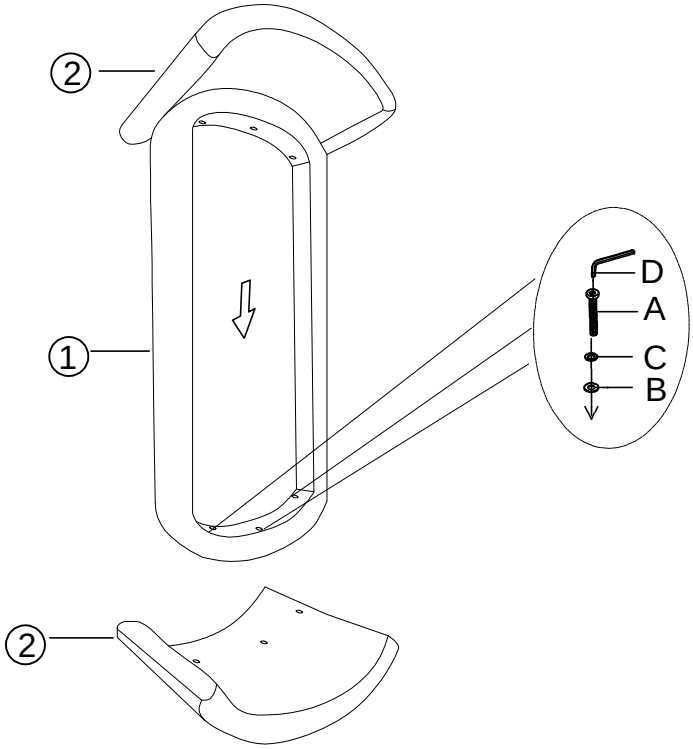

NOTE: For questions about parts or assembly please email support@meridianfurnitureusa.com or call us at 718-758-4455.