ASSEMBLY INSTRUCTIONS
#11084 #11085

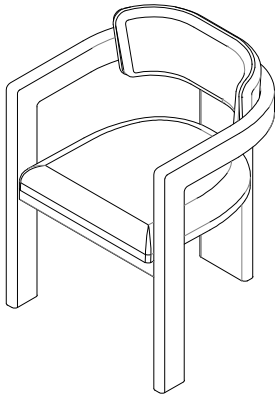

+ Do Not Use Power Tools

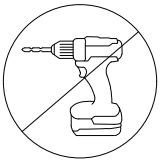

+ Suggested Adults

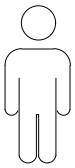

NOTE: For questions about parts or assembly please email support@meridianfurnitureusa.com or call us at 718-758-4455.

1 Read instructions cover to cover.
2 Save all packaging until assembly is completed.

+ Parts Included

① Base x1pc

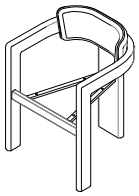

② Cushion x1pc

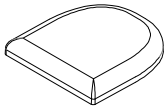

1 IMPORTANT SAFETY INFORMATION

Do not assemble the product if any of the following parts arrived damaged:

Part 1 - Chair base
Part 2 - Chair cushion

Do not assemble if any of the following Hardware parts are missing:

Part A - Allen Key
Part B - Bolt
Part C - Shrapnel
Part D - Gasket

2 IMPORTANT ASSEMBLY INFORMATION

Assembly Step If loosening persists, please make sure to tighten all the bolts periodically, or use a thread locker adhesive.

+ Hardware Included

A Allen Key x1pc 4#



B Bolt x4pcs M6x35

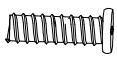

C Shrapnel x4pcs Ø10



D Gasket x4pcs Ø16xØ6

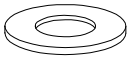

ASSEMBLY INSTRUCTIONS

#11084 #11085

1

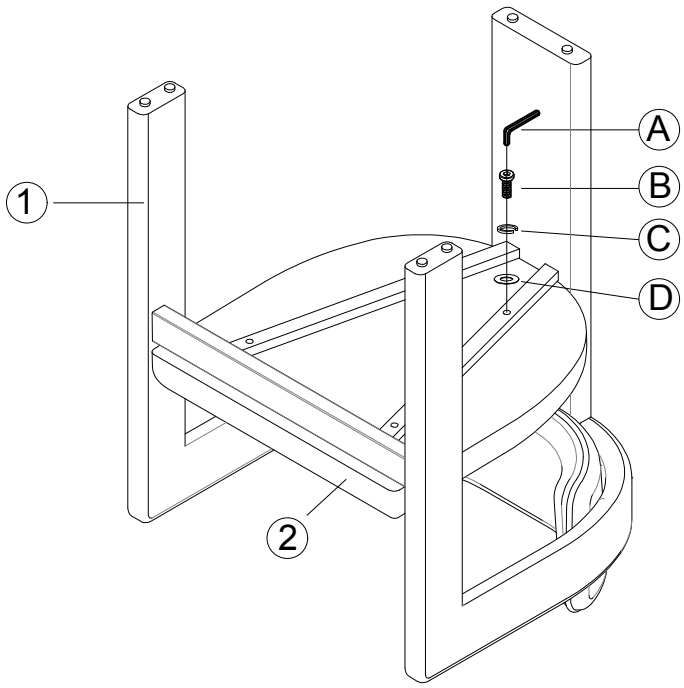

2

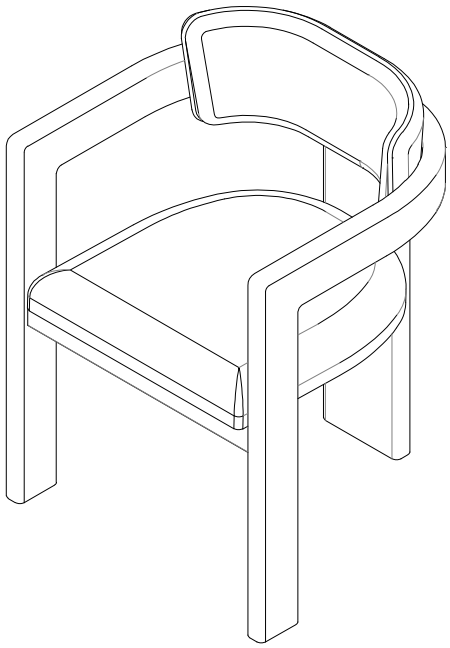

NOTE : For questions about parts or assembly please email support@meridianfurnitureusa.com or call us at 718-758-4455.