ASSEMBLY INSTRUCTIONS

11026/11027 DINING SIDE CHAIR

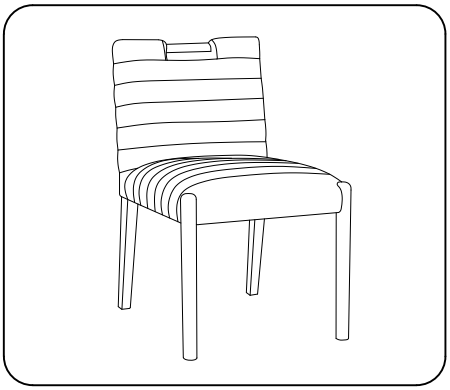

+ Do Not Use Power Tools



+ Suggested Adults



+ Part Included

① Back Frame x1pc

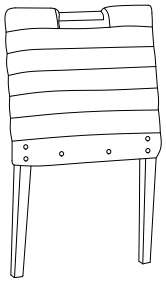

② Seat Frame x1pc

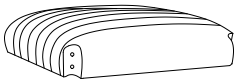

③ Front Leg x 2pcs



Note: For questions about parts or assembly please email support@meridianfurnitureusa.com or call us at 718-758-4455

1 Read instructions cover to cover.

2 Save all packaging until assembly is completed.

1 IMPORTANT SAFETY INFORMATION

Part 1 - Back Frame

Part 2 - Seat Frame

Part 3 - Front Leg

2 IMPORTANT SAFETY INFORMATION

If loosening persists, please make sure to tighten all the bolts periodically, or use a thread locker adhesive.

+ Hardware Included

Ⓐ Bolt Ø5/16"x 80MM x 4pcs



Ⓑ Bolt Ø5/16"x 60MM x 6pcs



Ⓒ Lock Washer Ø5/16"xØ13 x 10pcs



Ⓓ Flat Washer Ø5/16"xØ22 x 10pcs



Ⓔ Allen Key M5 1 pc



ASSEMBLY INSTRUCTIONS

11026/11027 DINING SIDE CHAIR

1

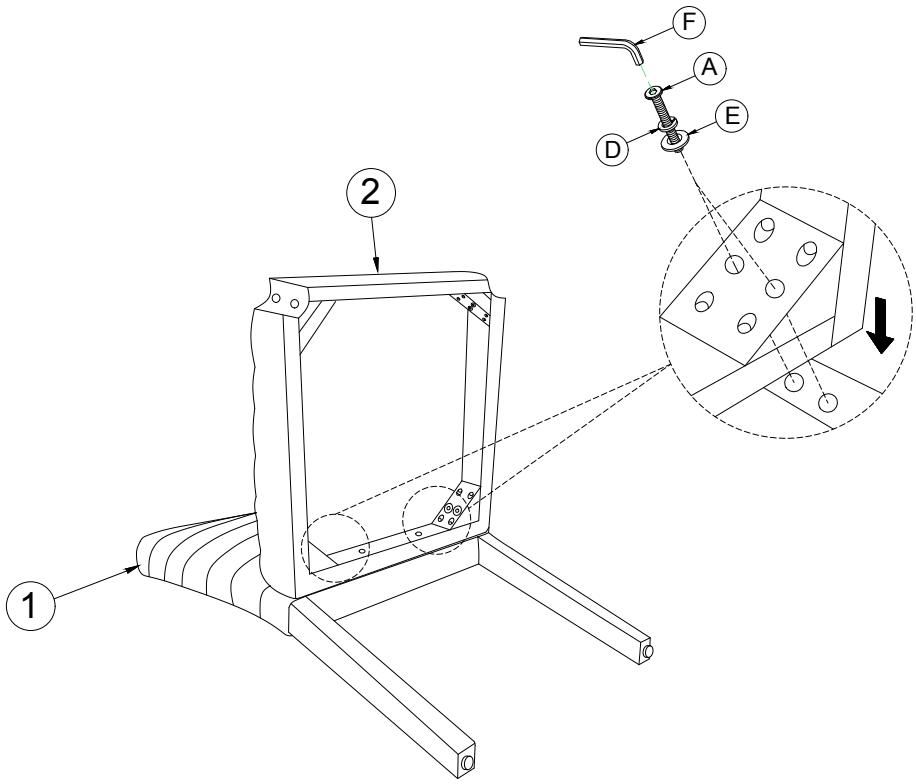

2

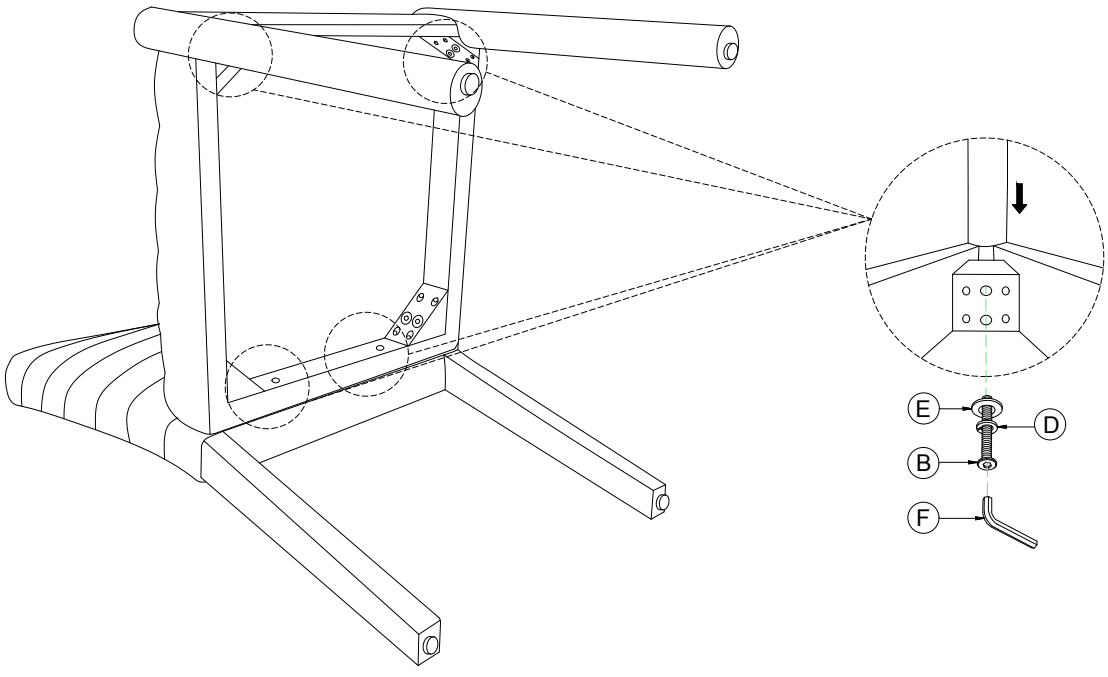

NOTE: For questions about parts or assembly please email support@meridianfurnitureusa.com or call us at 718-758-4455

ASSEMBLY INSTRUCTIONS

11026/11027 DINING SIDE CHAIR

3

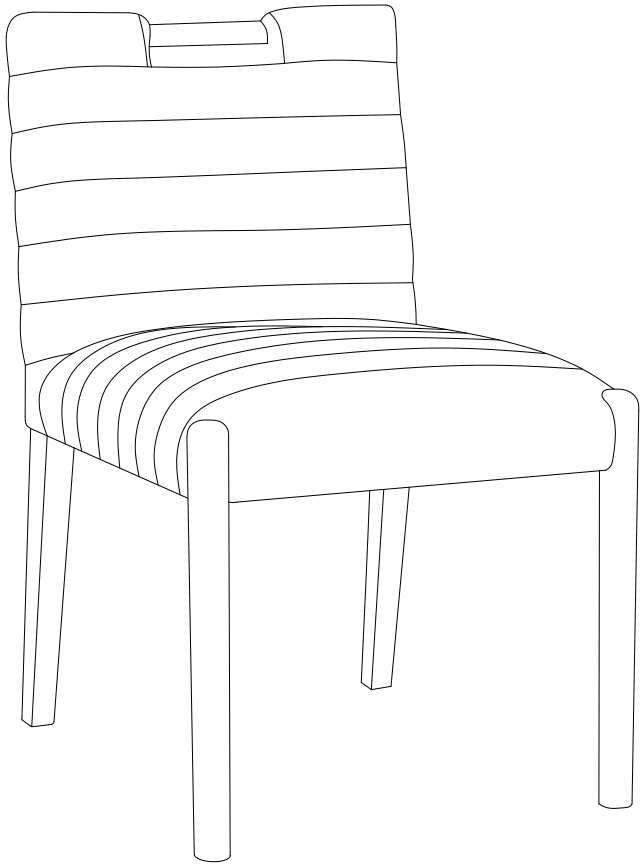

NOTE: For questions about parts or assembly please email support@meridianfurnitureusa.com or call us at 718-758-4455