ASSEMBLY INSTRUCTIONS

SKU/ITEM#:107 BENCH

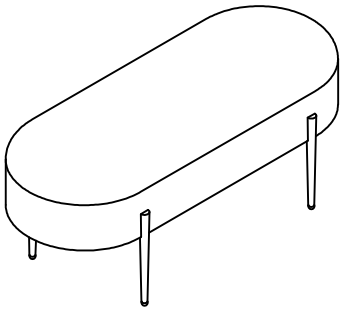

+ Do Not Use PowerTools



+ Suggested Adults



NOTE: For questions about parts or assembly please email support@meridianfurnitureusa.com or call us at 718-758-4455.

1 Read instructions cover to cover.

2 Save all packaging until assembly is completed.

1 IMPORTANT SAFETY INFORMATION

Do not assemble the product if any of the following parts arrived damaged:

Part ① Cushion

Part ② Leg

Do not assemble if any of the following Hardware parts are missing:

Part A Bolt 5/16"*1-3/4"
Part B Bolt 5/16"*1"
Part C Flat washer 5/16"
Part D Spring washer 5/16"
Part E Allen wrench 5/16"

2 IMPORTANT ASSEMBLY INFORMATION

Assembly Step If loosening persists, Please make sure to tighten all the bolts periodically, or use a thread locker adhesive.

+ Parts Included

① Cushion 1PC

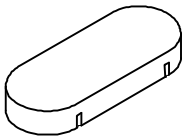

② Leg 4PCS



+ Hardware Included

A Bolt 5/16"*1-3/4" 4PCS



B Bolt 5/16"*1" 4PCS



C Flat washer 5/16" 8PCS



D Spring washer 5/16" 8PCS



E Allen wrench 5/16" 1PC



ASSEMBLY INSTRUCTIONS

meridian furniture

SKU/ITEM#:107 BENCH

1 Unzip bottom cover to assemble the seat !

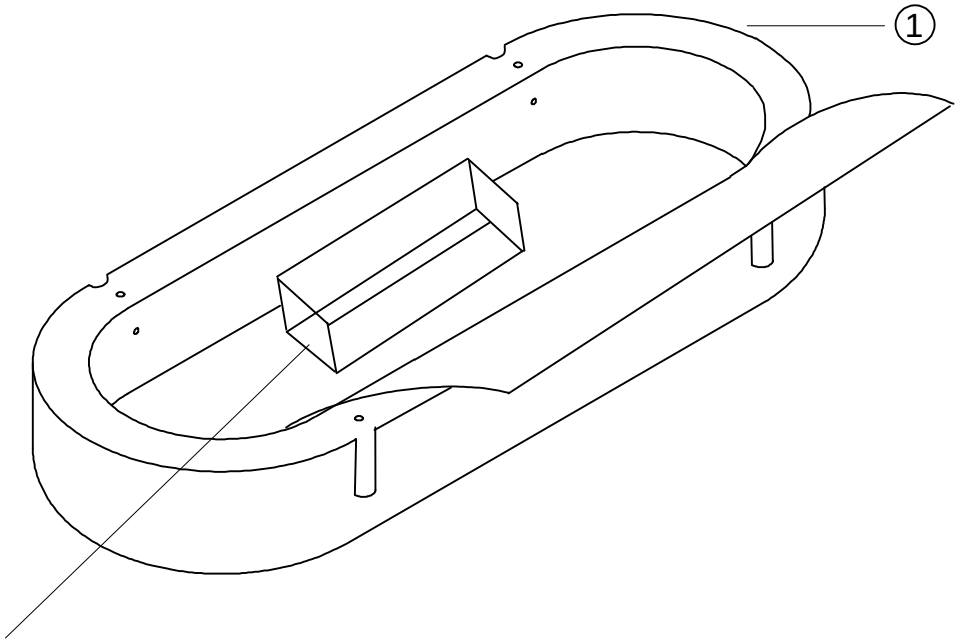

The legs are underneath the dust cover

2

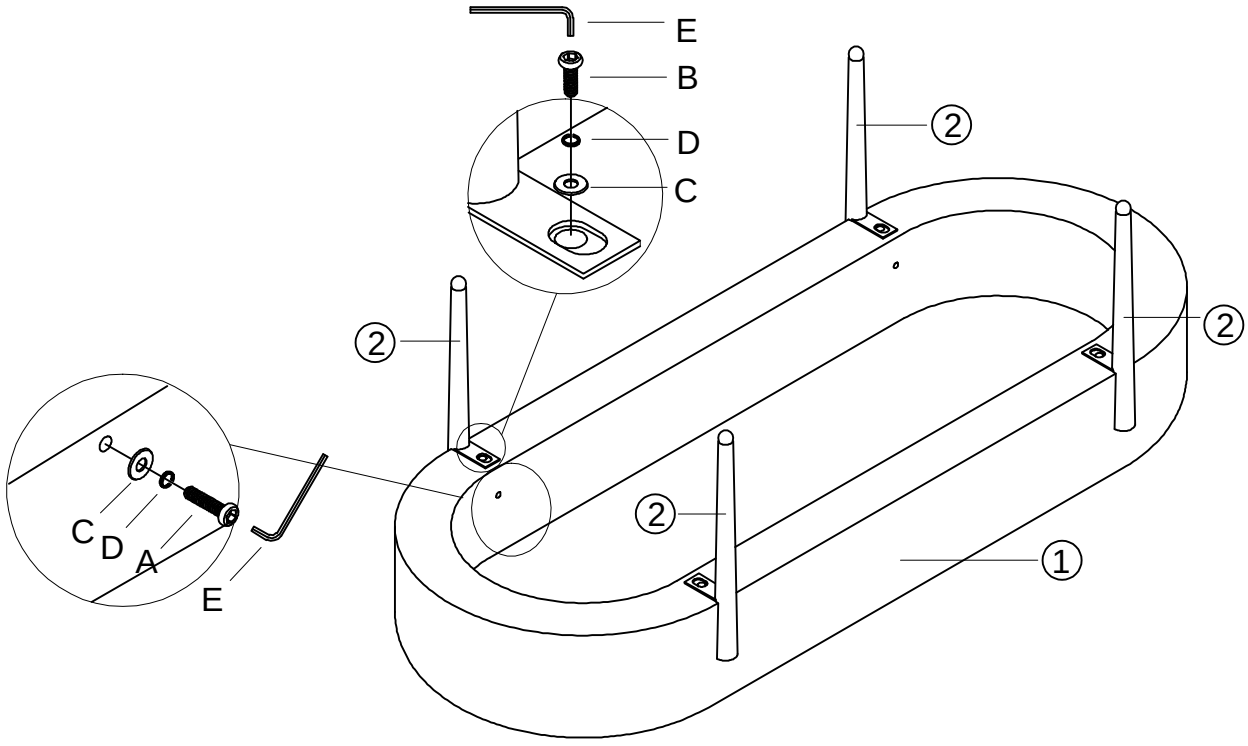

NOTE: For questions about parts or assembly please email support@meridianfurnitureusa.com or call us at 718-758-4455.

www.MeridianFurnitureUSA.com | support@meridianfurnitureusa.com